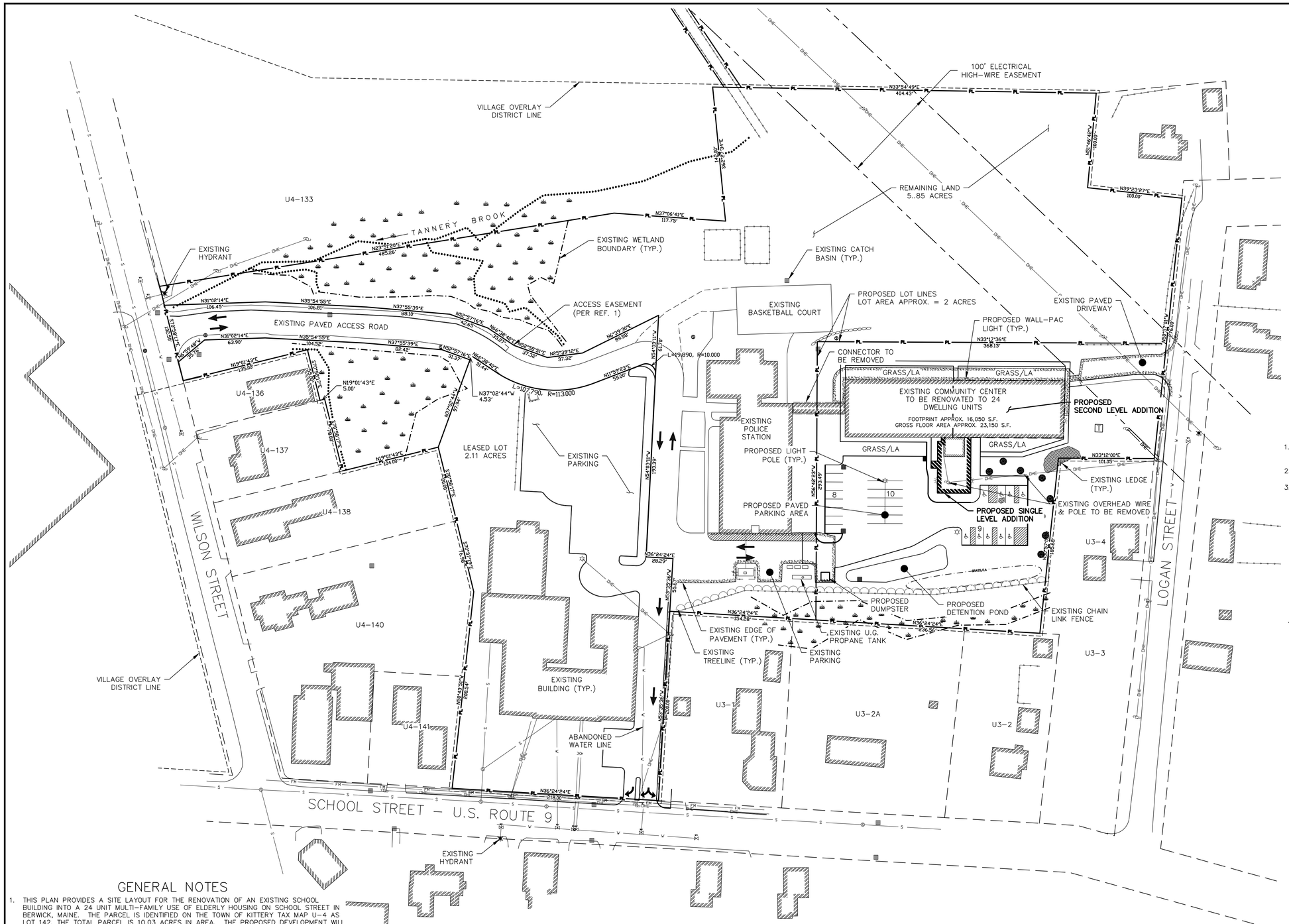

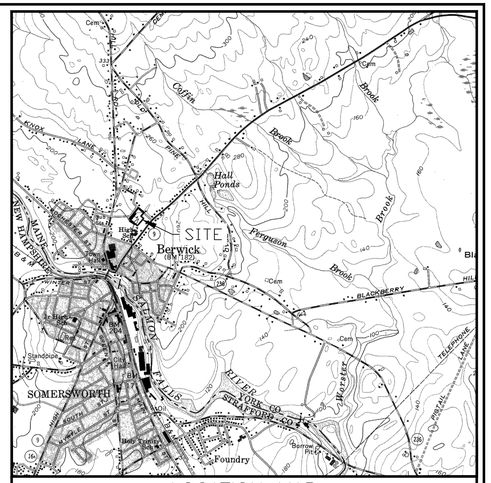

LOCATION MAP
APPROX. SCALE: 1" = 2,000'

OWNER:
TOWN OF BERWICK
11 SULLIVAN STREET
BERWICK, ME 03901

APPLICANT:
THE HOUSING PARTNERSHIP
P.O. BOX 466
PORTSMOUTH, NH 03802

REFERENCES

1. "ALTA/ACSM LAND TITLE SURVEY – 45 SCHOOL STREET, BERWICK, MAINE". PREPARED BY NORTHEAST CIVIL SOLUTIONS, SCARBOROUGH, MAINE. THREE SHEETS DATED 12/19/11, YCRD PLAN BOOK 353, PAGES 10–12.
2. "BOUNDARY SURVEY – 45 SCHOOL STREET, BERWICK, MAINE" PREPARED BY NORTHEAST CIVIL SOLUTIONS, SCARBOROUGH, MAINE. DATED 2/25/10.
3. BATEMAN PARTNERS SITE PLAN "SITE, LAYOUT & UTILITY PLAN" PREPARED BY NORTHEAST CIVIL SOLUTIONS, SCARBOROUGH, MAINE. REVISION 2 DATED 11/26/12.

LEGEND

- PROPERTY LINE
- BUFFERYARD OFFSET
- EXT. BUILDING
- EXT. GRAVEL
- EXT. PAVEMENT
- PRP. PAVEMENT
- EXT. PARKING
- PRP. PARKING
- EXT. STOCKADE FENCE
- PRP. STOCKADE FENCE
- EXT. TREELINE
- EXT. WETLAND BNDY (UPLAND / WETLAND)
- EXT. CATCH BASIN
- EXT. SEWER MANHOLE
- EXT. POWER POLE
- EXT. LIGHT POLE
- PRP. LIGHT POLE
- EXT. WATER VALVE
- EXT. WATER HYDRANT
- PRP. SILTATION FENCE
- EXT. STORM LINE
- EXT. SEWER LINE
- EXT. WATER LINE
- EXT. OVERHEAD ELEC
- EXT. U.G. ELECTRIC

GENERAL NOTES

1. THIS PLAN PROVIDES A SITE LAYOUT FOR THE RENOVATION OF AN EXISTING SCHOOL BUILDING INTO A 24 UNIT MULTI–FAMILY USE OF ELDERLY HOUSING ON SCHOOL STREET IN BERWICK, MAINE. THE PARCEL IS IDENTIFIED ON THE TOWN OF KITTERY TAX MAP U–4 AS LOT 142. THE TOTAL PARCEL IS 10.03 ACRES IN AREA. THE PROPOSED DEVELOPMENT WILL OCCUR ON A 2 ACRE LOT THE WILL BE DIVIDED FROM THE 10.03 ACRE PARCEL.
2. THE PROPOSED LOT IS IN THE COMMERCIAL INDUSTRIAL (C/I) DISTRICT AND VILLAGE OVERLAY DISTRICT.
3. THE PROJECT WILL BE SERVED BY PUBLIC WATER AND SEWER (BERWICK SEWER DISTRICT AND BERWICK WATER DEPARTMENT). ALL WATER AND SEWER CONSTRUCTION SHALL BE COORDINATED WITH THE RESPECTIVE DEPARTMENT/DISTRICT AND SHALL MEET THE APPROPRIATE DEPARTMENT/DISTRICT STANDARDS FOR CONSTRUCTION AND MATERIALS.
4. PROPOSED PARKING: 27 SPACES ARE PROVIDED, 9 OF WHICH ARE ADA ACCESSIBLE (33.3%). PROPOSED PARKING MEETS THE "ELDERLY" REQUIREMENT OF 1 SPACE PER DWELLING UNIT.
5. DISTURBED / IMPERVIOUS AREA (2.0 ACRE LOT):
   EXISTING IMPERVIOUS AREA = 18,000 S.F.
   FINAL IMPERVIOUS AREAS = 40,400 S.F.

   PROPOSED DISTURBED AREA = 1.3 ACRES
   PROPOSED BUILDING COVERAGE = 16,050 S.F./2.0 ACRES (87,120 S.F.) = 18.4%

GENERAL NOTES (CONT.)

6. PROPERTY BOUNDARY AND EXISTING CONDITIONS PER REFERENCE 2.
7. THE CONTRACTOR MUST CONTACT DIG SAFE AND ALL LOCAL UTILITIES PRIOR TO THE START OF CONSTRUCTION TO VERIFY THE LOCATION OF EXISTING SUBSURFACE UTILITIES AND CONDITIONS. LOCATING AND PROTECTING ANY UNDERGROUND OR ABOVE GROUND UTILITY IS THE SOLE RESPONSIBILITY OF THE CONTRACTOR. EXISTING SUBSURFACE UTILITIES DEPICTED ON THE PLANS ARE IN APPROXIMATE LOCATIONS AND ADDITIONAL EXISTING SUBSURFACE UTILITIES NOT SHOWN ON THE PLANS MAY EXIST.
8. PROPOSED UNDERGROUND UTILITIES ARE APPROXIMATELY LOCATED. CENTRAL MAINE POWER (CMP) WILL PREPARE THE ELECTRICAL PLAN FOR CONSTRUCTION. COORDINATION WITH CMP IS REQUIRED PRIOR TO CONSTRUCTION. ALL UTILITY CONSTRUCTION SHALL MEET CMP STANDARDS.
9. SIGNS SHALL MEET THE REQUIREMENTS OF SECTION 7.12 OF THE TOWN OF BERWICK LAND USE ORDINANCE, AS APPLICABLE.

GRAPHIC SCALE
0 50 100 150 200 (FEET)

PRELIMINARY
TAX MAP U4, LOT 142

NO.	DESCRIPTION	DATE
A	GENERAL REVISIONS	10/05/16

REVISIONS

OVERALL SITE PLAN
BERWICK SENIOR HOUSING
20 WILSON STREET, BERWICK, MAINE

FOR: THE HOUSING PARTNERSHIP
P.O. BOX 466
PORTSMOUTH, NH 03802

ATTAR ENGINEERING, INC.
CIVIL ◆ STRUCTURAL ◆ MARINE
1284 STATE ROAD – ELIOT, MAINE 03903
PHONE: (207)439–6023 FAX: (207)439–2128

SCALE: 1" = 50'	APPROVED BY:	DRAWN BY: MJS
DATE: 09/15/16		REVISION DATE: A : 10/05/16
JOB NO: C099–16	FILE: BERWICK SNR HOUSING BASE.DWG	SHEET 1

EXISTING BASKETBALL COURT

PROPOSED SILTATION FENCE (TYP.)

100' ELECTRICAL HIGH-WIRE EASEMENT

PROPOSED 6" GATE VALVE & 6" D.I. FIRE PROT. LINE

EXT. GRASS

PROPOSED WALL-PAC LIGHT (TYP.)

SIDEWALK

GRASS/LA

GRASS/LA (SEE LANDSCAPING NOTE)

EXT. PAVE.

EXT. SIDEWALK

SINGLE LEVEL

EXISTING COMMUNITY CENTER

FIRST FLOOR ELEVATION = 213.45

SINGLE LEVEL EXISTING PROPOSED SECOND LEVEL

PROPOSED U.G. ELECTRIC & TRANSFORMER PAD

PROPOSED WATER GATE & 2" HDPE DOMESTIC LINE

EXISTING POLICE STATION

PROPOSED POWER POLE

PROPOSED OVERHEAD WIRE

PROPOSED STAIRS

SNOW STORAGE

PROPOSED CB #1
RIM ELEV. = 206.0'
12" CMP INT. OUT = 203.50'

PROPOSED GUARD

ENTRY

EXISTING OVERHEAD WIRE TO BE REMOVED

EXISTING 8" D.I. WATER LINE

PROPOSED CB #2
RIM ELEV. = 206.0
12" CMP INV. IN = 203.30'
12" CMP INV. OUT = 203.20'

18.5' (TYP.)

9' (TYP.)

EXISTING POWER POLE TO BE REMOVED

PROPOSED SINGLE LEVEL ADDITION

PROPOSED LIGHT POLE (TYP.)

NATIVE TREE (TYP.)

PROPOSED STABILIZED CONSTRUCTION ENTRANCE SEE DETAIL SH. 5

PROPOSED ASPHALT CURB (TYP.)

U3-4

EXISTING BUILDING (TYP.)

TIMBER GUARDRAIL

EXISTING GRANITE BLOCK (TYP.)

SNOW STORAGE

PROPOSED RIP-RAP SWALE

EXISTING TANK

EXISTING PIPE FENCE

INV. OUT = 203.0'

GRASS

GRASS/LA

LOGAN STREET

EXISTING EDGE OF PAVEMENT (TYP.)

EXISTING U.G. PROPANE TANK

PROPOSED EMERGENCY SPILLWAY SEE DETAIL SH. 6

PROPOSED SILTATION FENCE (TYP.)

EXISTING CHAIN LINK FENCE

PROPOSED DUMPSTER

INV. OUT = 202.50'

PROPOSED OVERFLOW STRUCTURE
8" VERT. ORIFICE ELEV. = 205.0'
2" VERT. ORIFICE ELEV. = 203.0'
12" CMP INV. OUT = 203.0'

EXISTING TREELINE (TYP.)

INV. IN = 200.40'

EXISTING WETLANDS (TYP.)

U3-1

U3-2A

U3-2

U3-3

LANDSCAPING NOTE

1. AREAS NOTED AS "GRASS/LA" SHALL BE LANDSCAPED WITH A MIXTURE OF SHRUBS, PERENNIALS, AND SMALL, FLOWERING TREES. USE OF NATIVE PLANTS SHALL BE EMPHASIZED. SMALL AREAS OF TURF GRASS ARE ALLOWED WITHIN THESE AREAS.

LEGEND

PROPERTY LINE	
BUFFERYARD OFFSET	
EXT. BUILDING	
EXT. GRAVEL	
EXT. PAVEMENT	
PRP. PAVEMENT	
EXT. PARKING	
PRP. PARKING	
EXT. STOCKADE FENCE	
PRP. STOCKADE FENCE	
EXT. TREELINE	
EXT. WETLAND BNDY	UPLAND WETLAND
EXT. CATCH BASIN	
EXT. SEWER MANHOLE	
EXT. POWER POLE	
EXT. LIGHT POLE	
PRP. LIGHT POLE	
EXT. WATER VALVE	
EXT. WATER HYDRANT	
PRP. SILTATION FENCE	
EXT. STORM LINE	
EXT. SEWER LINE	
EXT. WATER LINE	
EXT. OVERHEAD ELEC	
EXT. U.G. ELECTRIC	

GRAPHIC SCALE

0 20 40 60 80 (FEET)

NO.	DESCRIPTION	DATE
A	GENERAL REVISIONS	10/05/16

REVISIONS

PRELIMINARY

TAX MAP U4, LOT 142

GRADING & UTILITY PLAN
BERWICK SENIOR HOUSING
20 WILSON STREET, BERWICK, MAINE

FOR: THE HOUSING PARTNERSHIP
P.O. BOX 466
PORTSMOUTH, NH 03802

ATTAR ENGINEERING, INC.
CIVIL ◆ STRUCTURAL ◆ MARINE
1284 STATE ROAD – ELIOT, MAINE 03903
PHONE: (207)439-6023 FAX: (207)439-2128

SCALE: 1" = 20'	APPROVED BY:	DRAWN BY: MJS
DATE: 09/15/16		REVISION DATE: A : 10/05/16
JOB NO: C099-16	FILE: BERWICK SNR HOUSING BASE.DWG	SHEET 2

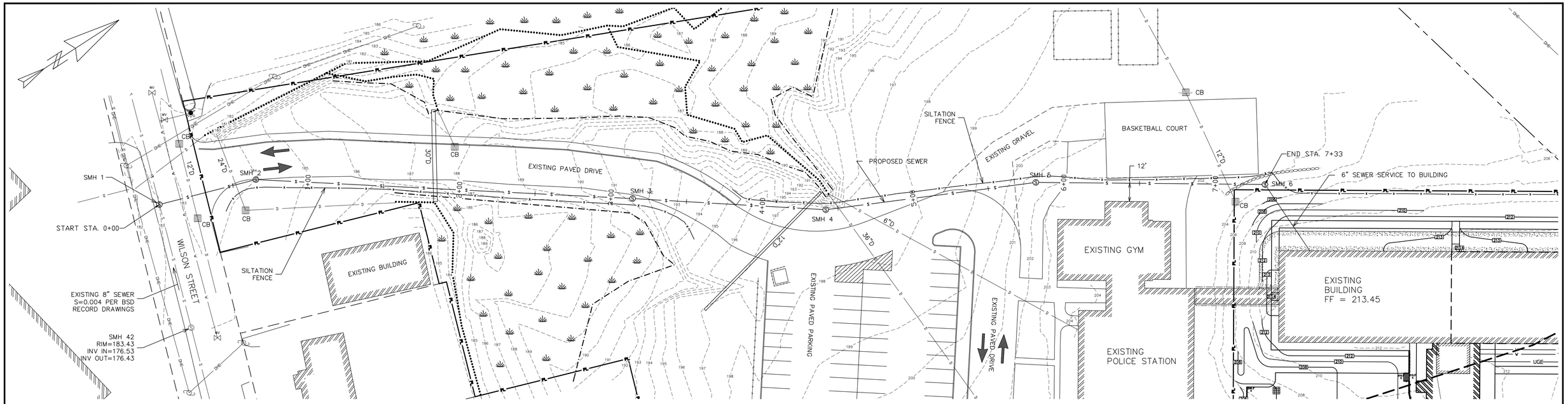

PLAN
SCALE: 1" = 30'

GRAPHIC SCALE
0 30 60 90 120 (FEET)

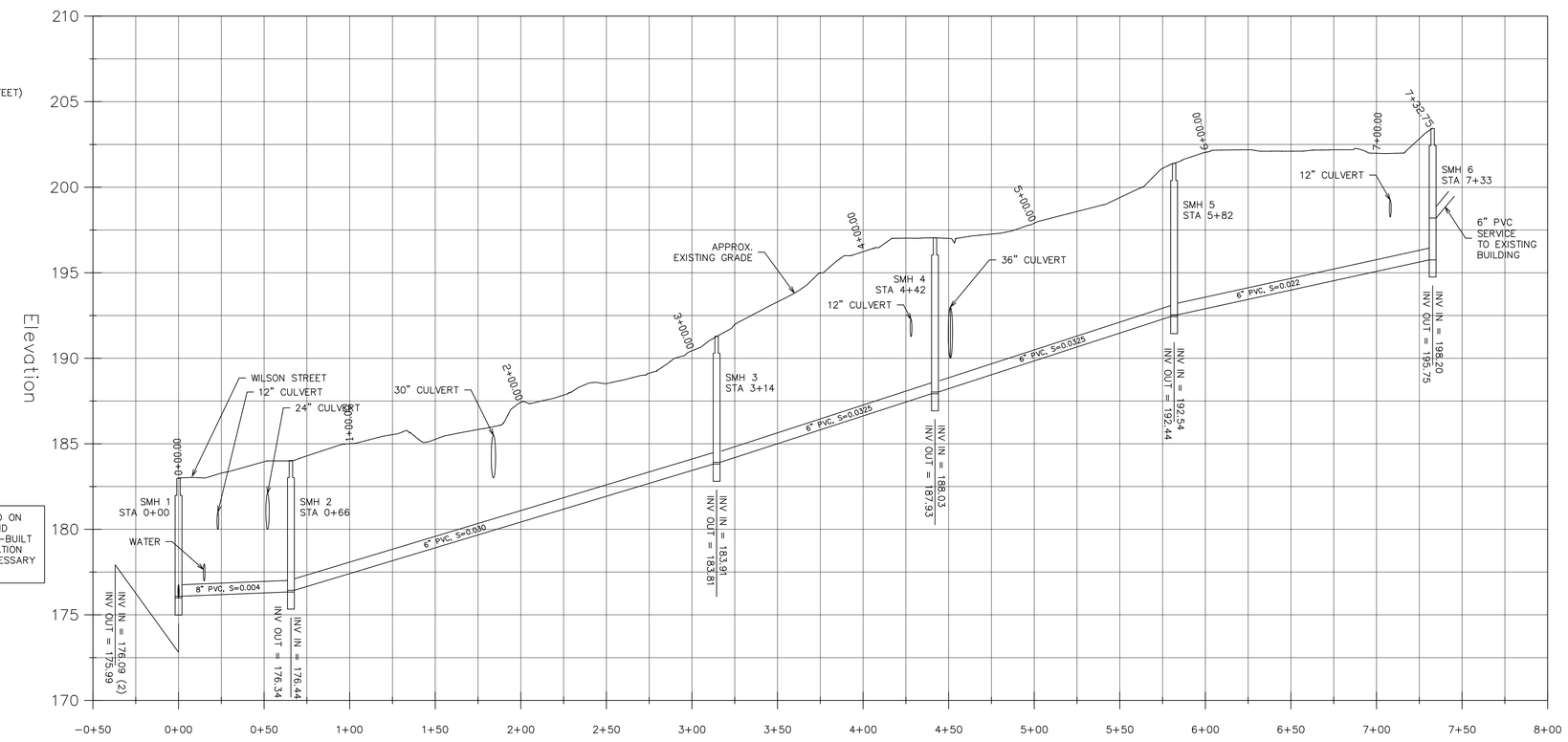

SMH 1 INVERTS ARE BASED ON BSD RECORD DRAWINGS AND OTHER AVAILABLE SITE AS-BUILT DRAWINGS. FIELD VERIFICATION OF SMH 1 INVERTS IS NECESSARY PRIOR TO CONSTRUCTION

PROFILE
H. SCALE: 1" = 40'
V. SCALE: 1" = 4'

GRAPHIC SCALE
0 40 80 120 160 (FEET)

PRELIMINARY
TAX MAP U4, LOT 142

NO.	DESCRIPTION	DATE
	REVISIONS	

PROPOSED SEWER PLAN & PROFILE
BERWICK SENIOR HOUSING
20 WILSON STREET, BERWICK, MAINE

FOR: THE HOUSING PARTNERSHIP
P.O. BOX 466
PORTSMOUTH, NH 03802

ATTAR ENGINEERING, INC.
CIVIL ◆ STRUCTURAL ◆ MARINE
1284 STATE ROAD – ELIOT, MAINE 03903
PHONE: (207)439-6023 FAX: (207)439-2128

SCALE: 1" = 20'	APPROVED BY:	DRAWN BY: MJS
DATE: 09/15/16		REVISION DATE: – : –
JOB NO: C099-16	FILE: BSH_SEWER PROFILE.DWG	SHEET 3

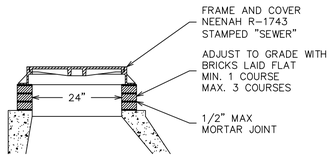

STANDARD COVER AND FRAME
SCALE: NTS

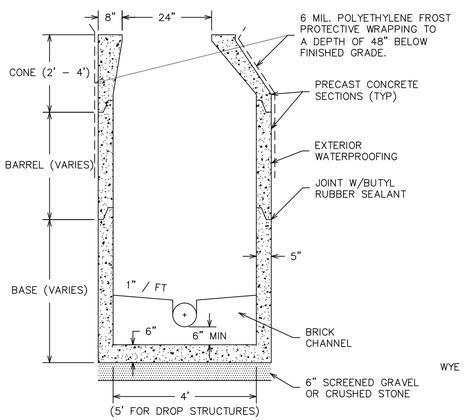

TYPICAL SANITARY MANHOLE
SCALE: NTS

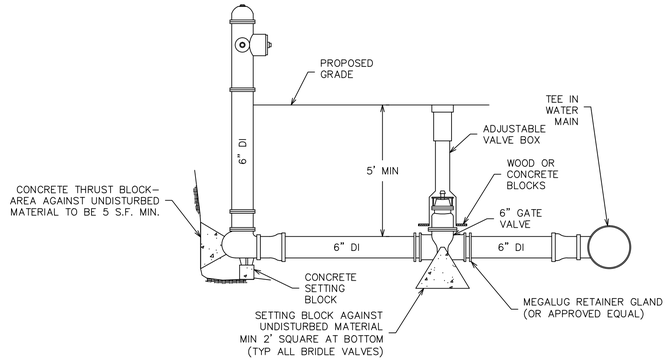

FIRE HYDRANT ASSEMBLY DETAIL
NTS

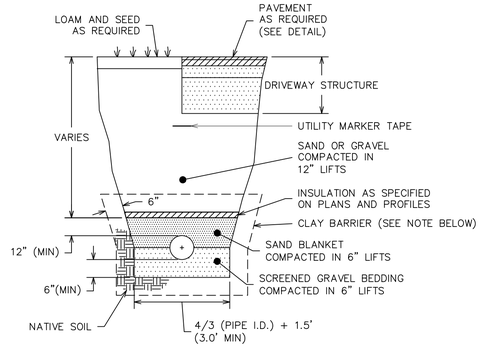

SEWER PIPE TRENCH DETAIL
SCALE: NTS

TRENCH TO BE SUPPORTED BY SLOPING BACK AT 2:1 OR OTHER ACCEPTABLE METHOD.

CLAY BARRIERS (12" THICK, APPOX. 100' INTERVALS) ALONG THE PIPE BEDDING SHALL BE INSTALLED IN AREAS OF HIGH GROUNDWATER OR AS DIRECTED BY THE INSPECTING ENGINEER.

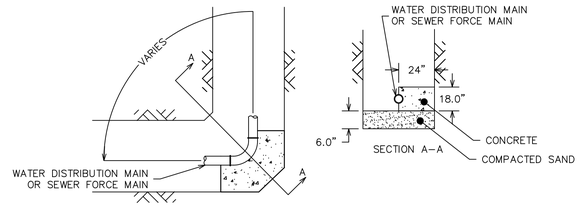

THRUST BLOCK DETAIL
(NTS)

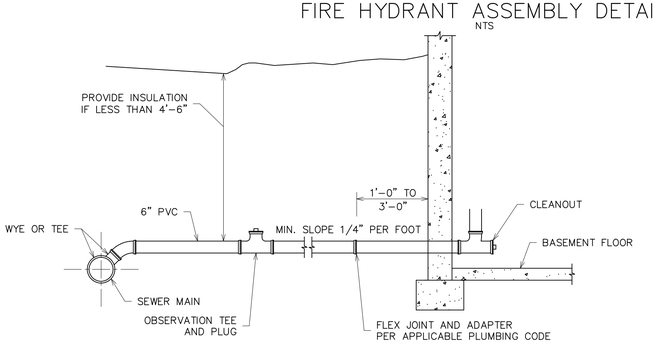

TYPICAL SERVICE CONNECTION AND HOUSE LATERAL DETAIL
SCALE: NTS

NOTE: HOUSE SEWER MAY BE LOCATED BENEATH BASEMENT FLOOR

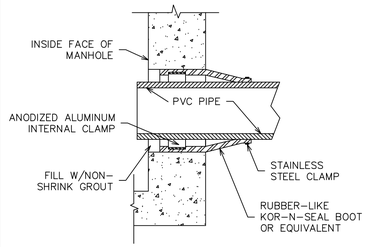

TYPICAL BOOT GASKET
SCALE: NTS

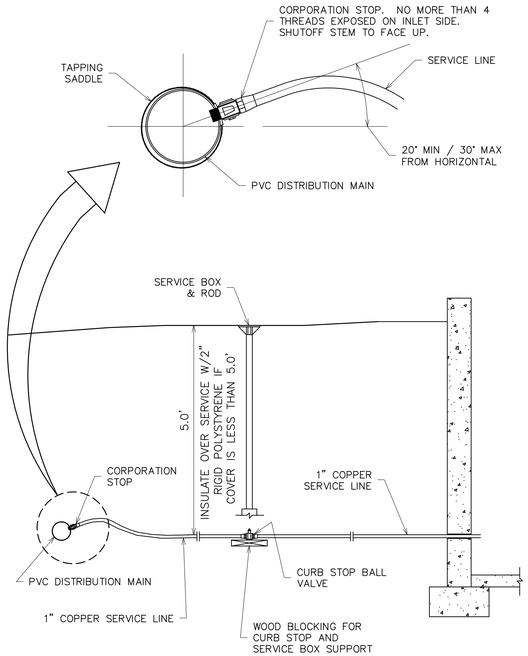

WATER SERVICE DETAIL
(NTS)

CONTRACTOR TO COORDINATE WITH WATER DISTRICT ON LOCATION OF CURB STOPS

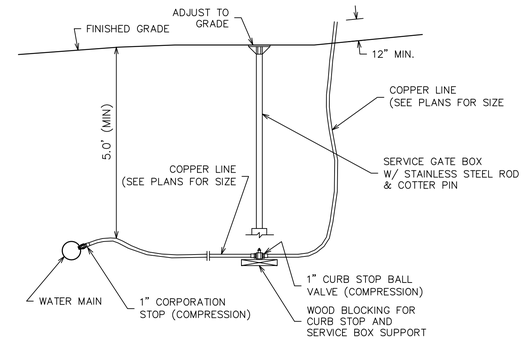

WATER BLOWOFF ASSEMBLY DETAIL
(NTS)

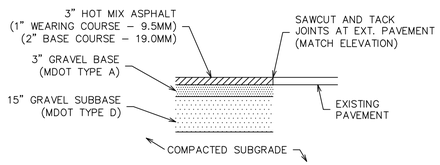

ASPHALT PARKING CROSS SECTION
(NTS)

GRAVEL FILL TO BE COMPACTED TO 95% MODIFIED PROCTOR

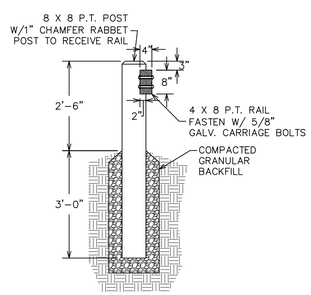

TIMBER GUARDRAIL DETAIL
(NTS)

MAXIMUM POST SPACING SHALL BE 6'.

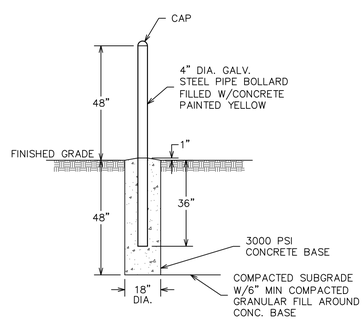

PROTECTIVE BOLLARD DETAIL
(NTS)

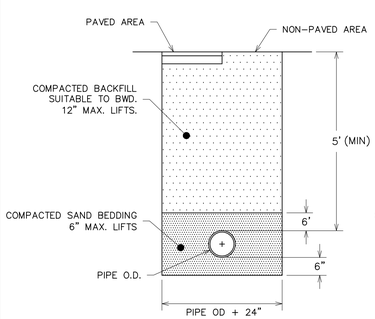

WATER LINE TRENCH DETAIL
(NTS)

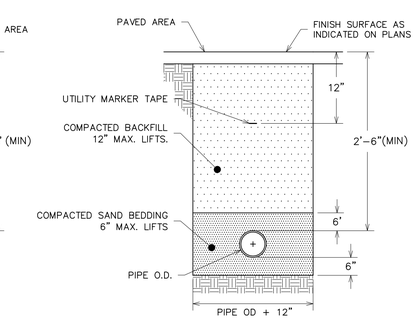

UTILITY CONDUIT TRENCH DETAIL
(NTS)

NO.	DESCRIPTION	DATE	
	REVISIONS		

SITE DETAILS
BERWICK SENIOR HOUSING
20 WILSON STREET, BERWICK, MAINE

FOR: THE HOUSING PARTNERSHIP
P.O. BOX 466
PORTSMOUTH, NH 03802

ATTAR ENGINEERING, INC.
CIVIL ◆ STRUCTURAL ◆ MARINE
1284 STATE ROAD - ELIOT, MAINE 03903
PHONE: (207)439-6023 FAX: (207)439-2128

SCALE: AS NOTED	APPROVED BY:	DRAWN BY: EAB
DATE: 9/15/16		REVISION : DATE - : -
JOB NO: C099-16	CAD FILE: BSH_DET	SHEET 4

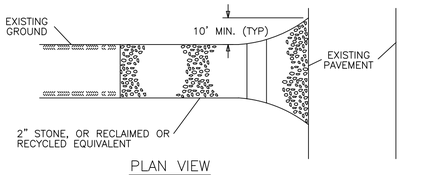

PLAN VIEW

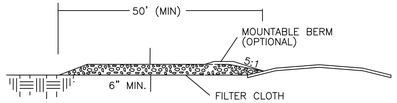

PROFILE

NOTES:

1. GEOTEXTILE: PLACE FILTER CLOTH OVER ENTIRE AREA TO BE COVERED WITH AGGREGATE. FILTER CLOTH WILL NOT BE REQUIRED ON A SINGLE FAMILY RESIDENTIAL LOT.

2. PIPING OF SURFACE WATER UNDER ENTRANCE SHALL BE PROVIDED AS REQUIRED. IF PIPING IS IMPOSSIBLE, A MOUNTABLE BERM WITH A 5:1 SLOPE WILL BE PERMITTED.

STABILIZED CONSTRUCTION ENTRANCE

EROSION & SEDIMENTATION CONTROL NOTES

1. SILTATION FENCE OR HAY BALE BARRIERS WILL BE INSTALLED DOWNSLOPE OF ALL STRIPPING OR CONSTRUCTION OPERATIONS. A DOUBLE SILT FENCE BARRIER SHALL BE INSTALLED DOWNSLOPE OF ANY SOIL MATERIAL STOCKPILES. SILT FENCES SHALL BE INSPECTED AFTER EACH RAIN EVENT AND DAILY DURING PROLONGED RAIN. SILT AND SOIL PARTICLES ACCUMULATING BEHIND THE FENCE SHALL BE REMOVED AFTER EACH SIGNIFICANT RAIN EVENT AND IN NO INSTANCE SHOULD ACCUMULATION EXCEED 1/2 THE HEIGHT OF THE FENCE. TORN OR DAMAGED AREAS SHALL BE REPAIRED.

2. TEMPORARY AND PERMANENT VEGETATION AND MULCHING IS AN INTEGRAL COMPONENT OF THE EROSION AND SEDIMENTATION CONTROL PLAN. ALL AREAS SHALL BE INSPECTED AND MAINTAINED UNTIL THE DESIRED VEGETATIVE COVER IS ESTABLISHED. THESE CONTROL MEASURES ARE ESSENTIAL TO EROSION PREVENTION AND ALSO REDUCE COSTLY REWORK OF GRADED AND SHAPED AREAS.

3. SEEDING, FERTILIZER AND LIME RATES AND TIME OF APPLICATION WILL BE DEPENDENT ON SOIL REQUIREMENTS. TEMPORARY VEGETATION SHALL BE MAINTAINED IN THESE AREAS UNTIL PERMANENT SEEDING IS APPLIED. ADDITIONALLY, EROSION AND SEDIMENTATION MEASURES SHALL BE MAINTAINED UNTIL PERMANENT VEGETATION IS ESTABLISHED.

4. ALL LAWN AREA, OUTER POND SIDE SLOPES AND SWALES SHALL BE PERMANENTLY SEEDED WITH THE FOLLOWING MIXTURE: 20 LB/ACRE CREEPING RED FESCUE, 2 LB/ACRE REDTOP AND 20 LB/ACRE TALL FESCUE FOR A TOTAL OF 42 LB/ACRE. FERTILIZER AND LIME RATES SHALL BE DEPENDENT ON SOIL TESTING. IN THE ABSENCE OF SOIL TESTS, FERTILIZE WITH 10–20–20 (N–P205–K201) AT 800 LB/ACRE AND LIME AT 3 TONS/ACRE. MULCH WITH HAY AT 70–90 LB/1000 S.F. 4" OF LOAM SHALL BE APPLIED PRIOR TO SEEDING.

5. POND BOTTOMS AND INNER POND SIDESLOPES SHALL BE PERMANENTLY SEEDED WITH THE FOLLOWING MIXTURE: 20 LB/ACRE CREEPING RED FESCUE, 8 LB/ACRE BIRDSFOOT TREFOIL AND 20 LB/ACRE TALL FESCUE FOR A TOTAL OF 48 LB/ACRE. SEE THE ABOVE NOTE FOR FERTILIZER, LIME AND MULCHING RATES.

6. TEMPORARY VEGETATION OF ALL DISTURBED AREAS, MATERIAL STOCKPILES AND OTHER SUCH AREAS SHALL BE ESTABLISHED BY SEEDING WITH EITHER WINTER RYE AT A RATE OF 112 LB/ACRE OR ANNUAL RYEGRASS AT A RATE OF 40 LB/ACRE. WINTER RYE SHALL BE USED FOR FALL SEEDING AND ANNUAL RYEGRASS FOR SHORT DURATION SEEDING. SEEDING SHALL BE ACCOMPLISHED BEFORE OCTOBER 1.

7. TEMPORARY SEEDING OF DISTURBED AREAS SHALL BE ACCOMPLISHED BEFORE OCTOBER 1. PERMANENT SEEDING SHALL BE ACCOMPLISHED BEFORE SEPTEMBER 15.

8. ALL SEEDED AREAS SHALL BE MULCHED WITH HAY AT A RATE OF 2 BALES (70–90 LB) PER 1000 S.F. OF SEEDED AREA.

9. ALL DISTURBED AREAS ON THE SITE SHALL BE PERMANENTLY STABILIZED WITHIN 7 DAYS OF FINAL GRADING OR TEMPORARILY STABILIZED WITHIN 30 DAYS OF INITIAL DISTURBANCE.

10. A STABILIZED CONSTRUCTION ENTRANCE SHALL BE INSTALLED AT ALL ACCESSES TO PUBLIC ROADS (SEE PLAN). TEMPORARY CULVERTS SHALL BE PROVIDED AS REQUIRED.

11. SLOPES 2:1 OR STEEPER SHALL BE TREATED WITH POLYJUTE OPEN WEAVE GEOTEXTILE (OR EQUIVALENT) AFTER SEEDING. JUTE MATS SHALL BE ANCHORED PER MANUFACTURER'S SPECIFICATIONS.

12. EXCESSIVE DUST CAUSED BY CONSTRUCTION OPERATIONS SHALL BE CONTROLLED BY APPLICATION OF WATER OR CALCIUM CHLORIDE.

13. THE CONTRACTOR MAY OPT TO USE EROSION CONTROL MIX BERM AS A SEDIMENT BARRIER IN LIEU OF SILTATION FENCE OR HAY BALE BARRIERS WITH APPROVAL FROM THE INSPECTING ENGINEER.

DRIVEWAY CONSTRUCTION NOTES

1. DRIVEWAYS TO BE CONSTRUCTED IN ACCORDANCE WITH THE APPROPRIATE CROSS SECTION DETAIL. GRAVEL FILL TO BE COMPACTED TO 95% MODIFIED PROCTOR IN ACCORDANCE WITH ASTM D 1557. LIFT THICKNESSES TO BE A MAXIMUM OF 6".

2. ALL STUMPS, ORGANIC MATERIAL, ROCKS AND BOULDERS TO BE REMOVED TO A MINIMUM DEPTH OF 24" BELOW SUBBASE.

3. ALL STUMPS, LEDGE AND LARGE BOULDERS TO BE REMOVED FROM THE CONSTRUCTION AREA. THE CONSTRUCTION AREA SHALL BE CLEARED AND ROUGH GRADED.

4. ALL CULVERTS TO BE ADS N–12 (HDPE) OR APPROVED EQUAL. CULVERT INLETS AND OUTLETS TO BE PROTECTED IN ACCORDANCE WITH THE CULVERT INLET/OUTLET PROTECTION DETAIL.

5. THE CONTRACTOR MUST CONTACT DIG SAFE AND ALL LOCAL UTILITIES PRIOR TO THE START OF CONSTRUCTION TO VERIFY THE LOCATION OF EXISTING SUBSURFACE UTILITIES AND CONDITIONS. LOCATING AND PROTECTING ANY UNDERGROUND OR ABOVE GROUND UTILITY IS THE SOLE RESPONSIBILITY OF THE CONTRACTOR.

WINTER CONSTRUCTION NOTES

NOVEMBER 1 – APRIL 15

1. EXPOSED AREAS SHOULD BE LIMITED TO AN AREA THAT CAN BE MULCHED IN ONE DAY PRIOR TO ANY SNOW EVENT.

2. AN AREA SHALL BE CONSIDERED STABILIZED WHEN EXPOSED SURFACES HAVE BEEN EITHER MULCHED WITH HAY AT A RATE OF 100 LB/1000 S.F. OR DORMANT SEEDED, MULCHED AND ADEQUATELY ANCHORED BY AN APPROVED ANCHORING TECHNIQUE. IN ALL CASES, MULCH SHALL BE APPLIED SO THAT THE SOIL SURFACE IS NOT VISIBLE THROUGH THE MULCH.

3. FROM OCTOBER 15 TO APRIL 1, LOAM AND SEED WILL NOT BE REQUIRED. DURING PERIODS OF TEMPERATURES ABOVE FREEZING, DISTURBED AREAS SHALL BE FINE GRADED AND PROTECTED WITH MULCH OR TEMPORARILY SEEDED AND MULCHED UNTIL PERMANENT SEEDING CAN BE APPLIED. AFTER NOVEMBER 1, DISTURBED AREAS MAY BE LOAMED, FINE GRADED AND DORMANT SEEDED AT A RATE 200–300% HIGHER THAN THE SPECIFIED PERMANENT SEEDING RATE. IF CONSTRUCTION CONTINUES DURING FREEZING WEATHER, DISTURBED AREAS SHALL BE GRADED BEFORE FREEZING AND TEMPORARILY STABILIZED WITH MULCH. DISTURBED AREAS SHALL NOT BE LEFT OVER THE WINTER OR FOR ANY OTHER EXTENDED PERIOD OF TIME UNLESS STABILIZED WITH MULCH.

4. FROM NOVEMBER 1 TO APRIL 15 ALL MULCH SHALL BE ANCHORED BY EITHER PEG LINE, MULCH NETTING, ASPHALT EMULSION CHEMICAL, TRACK OR WOOD CELLULOSE FIBER. MULCH NETTING SHALL BE USED TO ANCHOR MULCH IN ALL DRAINAGE WAYS WITH SLOPES GREATER THAN 3%, SLOPES EXPOSED TO DIRECT WINDS AND FOR SLOPES GREATER THAN 8%. MULCH NETTING SHALL BE USED TO ANCHOR MULCH IN ALL AREAS WITH SLOPES GREATER THAN 15%. AFTER OCTOBER 1, THE SAME APPLIES TO ALL SLOPES GREATER THAN 8%.

5. DURING WINTER CONSTRUCTION, DORMANT SEEDING OR MULCH AND ANCHORING SHALL BE APPLIED TO ALL DISTURBED AREAS AT THE END OF EACH WORKING DAY.

6. SNOW SHALL BE REMOVED FROM AREAS OF SEEDING AND MULCHING PRIOR TO PLACEMENT.

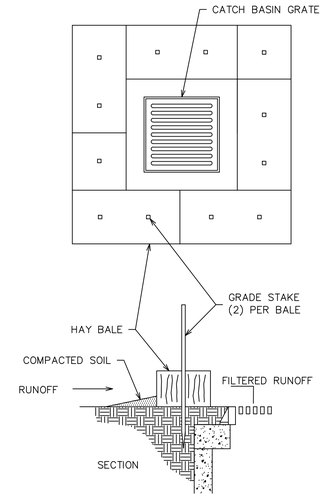

HAY BALE FILTER FOR CATCH BASIN

(NTS)

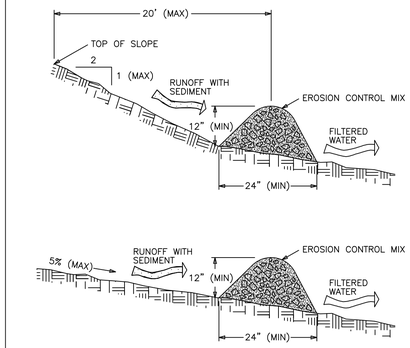

EROSION CONTROL MIX COMPOSITION STANDARDS:

– THE ORGANIC MATTER CONTENT SHALL BE BETWEEN 80 AND 100%, DRY WEIGHT BASIS.

– PARTICLE SIZE BY WEIGHT SHALL BE 100% PASSING A 6" SCREEN AND A MINIMUM OF 70%, MAXIMUM OF 85% PASSING A 0.75" SCREEN.

– THE ORGANIC PORTION NEEDS TO BE FIBROUS AND ELONGATED

– LARGE PORTIONS OF SILTS, CLAYS OR FINE SANDS ARE NOT ACCEPTABLE IN THE MIX

– SOLUBLE SALTS CONTENT SHALL BE <4.0 mmhos/cm

– THE pH SHOULD FALL BETWEEN 5.0 AND 8.0

EROSION CONTROL MIX BERM

(NTS)

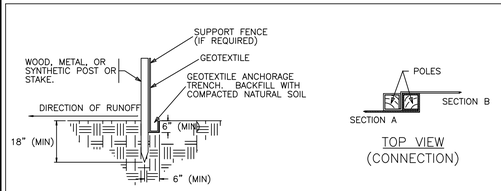

TOE – IN METHOD

TOP VIEW
(CONNECTION)

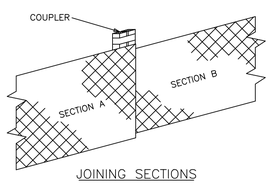

NOTES:

1. DEPENDING UPON THE CONFIGURATION, ATTACH GEOTEXTILE TO WIRE MESH WITH HOG RINGS, TO STEEL POSTS WITH TIE WIRES, AND TO WOOD POSTS WITH STAPLES.

2. POSTS MAY BE WIRED TOGETHER WHEN JOINING SECTIONS.

JOINING SECTIONS

THE COUPLER CAN BE ANY ACCEPTABLE DEVICE USED TO TIE THE POLES TOGETHER

TEMPORARY SILT FENCE – NTS

CONCRETE PAD DETAIL

PADS SHALL HAVE CRACK CONTROL JOINTS AT 6' (MAX) INTERVALS

(NTS)

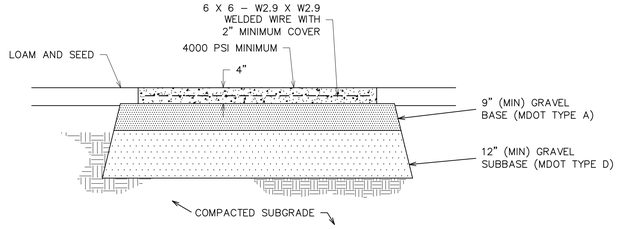

CONCRETE SIDEWALK DETAIL

PROVIDE CRACK CONTROL JOINTS AT 6' INTERVALS (MAX)
SURFACE WITH MEDIUM BROOM FINISH

(NTS)

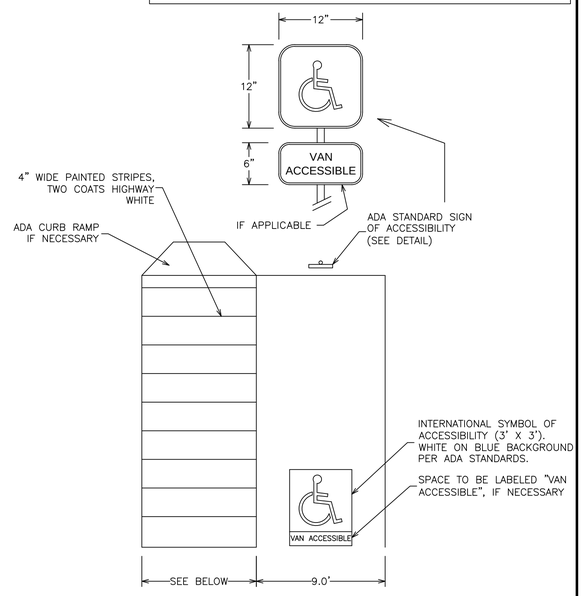

ACCESSIBLE PARKING SPACE DETAIL

AISLE SHALL BE 5' WIDE FOR AUTOMOBILES OR 8' WIDE FOR VANS

(NTS)

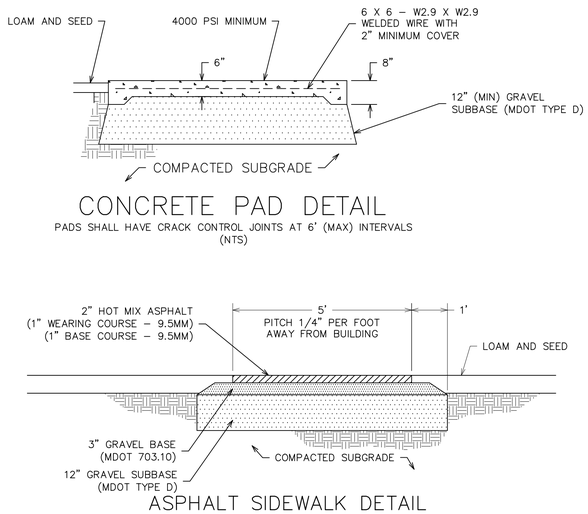

ASPHALT SIDEWALK DETAIL

(NTS)

GRAVEL FILL TO BE COMPACTED TO 95% MODIFIED PROCTOR

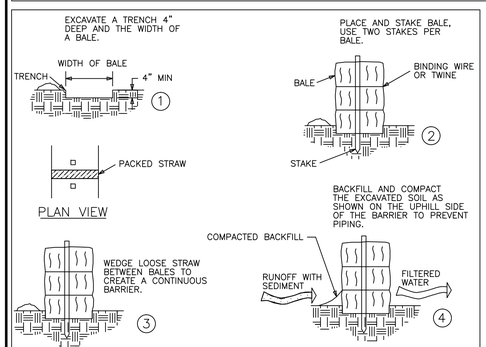

NOTES:

1. PLACE BALES IN A SINGLE ROW, LENGTHWISE ON THE CONTOUR.

2. PLACE BALES 10' AWAY FROM THE TOE OF SLOPE.

3. IN SLOPING AREAS WHERE SURFACE FLOW FOLLOWS THE BALE LINE, INSTALL PERPENDICULAR BALE CHECKS AT APPROPRIATE INTERVALS (100' MAX.)

HAY BALE BARRIER

(NTS)

NOTES:
1. SIZING AND OPERATION OF SILT FILTRATION BAG TO BE IN ACCORDANCE WITH MANUFACTURER'S SPECIFICATIONS.
2. SILT FILTRATION BAG SHALL NOT BE OVER PRESSURIZED OR OPERATED BEYOND CAPACITY.
3. LOCATE DISCHARGE SITE ON FLAT UPLAND AREAS AS FAR AWAY AS POSSIBLE FROM STREAMS, WETLANDS, OTHER RESOURCES AND POINTS OF CONCENTRATED FLOW.
4. DOWNGRADIENT RECEIVING AREA MUST BE WELL VEGETATED OR OTHERWISE STABLE FROM EROSION (E.G. FOREST FLOOR OR COARSE GRAVEL / STONE).
5. DISCHARGE IS NOT PERMITTED WITHIN 25' OF A WETLAND.
6. FULL SILT FILTRATION BAGS SHALL BE LEGALLY DISPOSED OF.

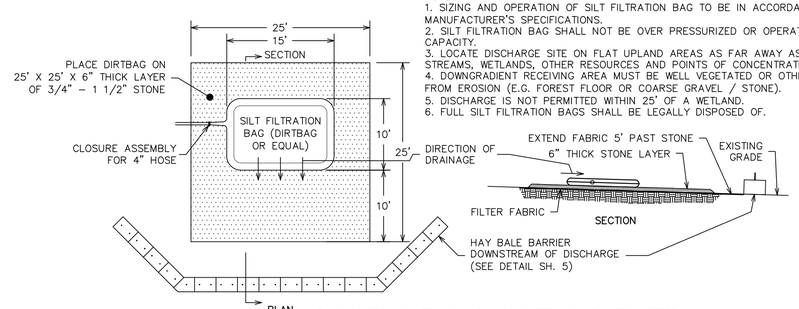

CONSTRUCTION DEWATERING FILTER DETAIL FOR PUMPED DISCHARGE

(NTS)

NO.	DESCRIPTION	DATE	
	REVISIONS		

SITE DETAILS
BERWICK SENIOR HOUSING
20 WILSON STREET, BERWICK, MAINE

FOR: THE HOUSING PARTNERSHIP
P.O. BOX 466
PORTSMOUTH, NH 03802

ATTAR ENGINEERING, INC.
CIVIL ◆ STRUCTURAL ◆ MARINE
1284 STATE ROAD – ELIOT, MAINE 03903
PHONE: (207)439–6023 FAX: (207)439–2128

SCALE: AS NOTED	APPROVED BY:	DRAWN BY: EAB
DATE: 9/15/16		REVISION : DATE – : –
JOB NO: C099–16	CAD FILE: BSH_DET	SHEET 5

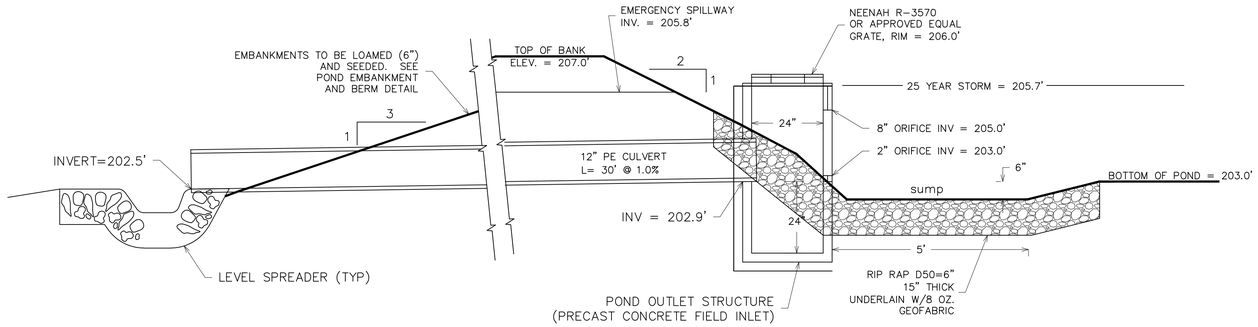

CROSS-SECTION DETENTION POND 1 (SEE SH. 2 FOR PLAN VIEW)

(NTS)

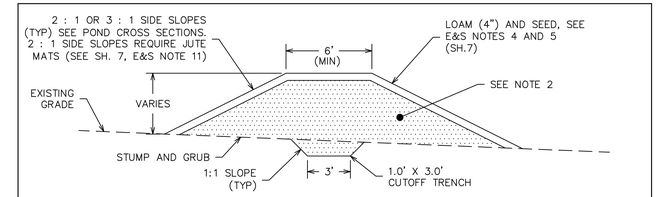

POND EMBANKMENT AND BERM DETAIL

SCALE: 1" = 5'

EMBANKMENT CONSTRUCTION NOTES

1. ALL ORGANIC MATERIAL, STUMPS, ROCKS AND BOULDERS SHALL BE REMOVED TO A MINIMUM DEPTH OF 24" BELOW SUBGRADE OF THE BASIN EMBANKMENT. ALL EXCAVATIONS BELOW THE BASIN EMBANKMENT SHALL HAVE A MINIMUM SLOPE OF 1H : 1V.

2. ALL BASIN EMBANKMENT FILL MATERIAL SHALL BE WELL GRADED BORROW WITH A MINIMUM OF 20% FINES CONTENT. EMBANKMENT FILL SHALL BE PLACED IN 12" (MAX.) LIFTS AND BE COMPACTED TO 95% MODIFIED PROCTOR. A CUTOFF TRENCH SHALL BE EXCAVATED AS SHOWN PRIOR TO CONSTRUCTION OF EMBANKMENT.

3. DETENTION BASIN AND ALL EXCAVATIONS SHALL BE KEPT FREE OF WATER DURING CONSTRUCTION.

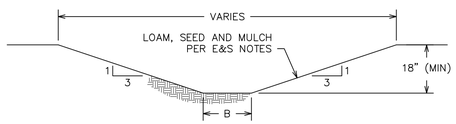

VEGETATED SWALE DETAIL

NTS

B (BOTTOM WIDTH) SHALL BE 2' FOR TYPE 1 SWALES AND 5' FOR TYPE 2 SWALES.

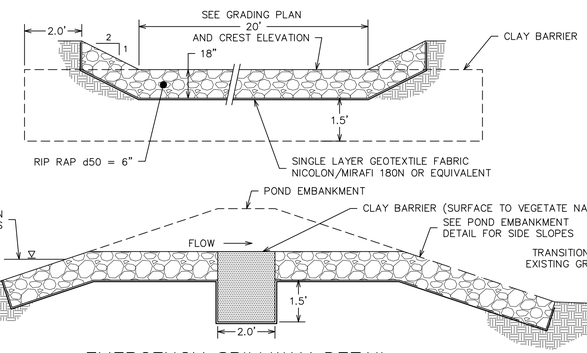

EMERGENCY SPILLWAY DETAIL

(NTS)

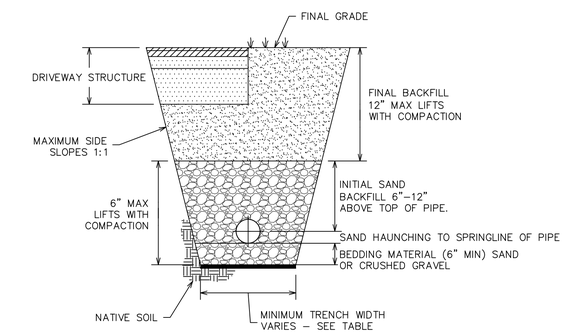

HDPE CULVERT TRENCH DETAIL

(NTS)

TRENCH TO BE SUPPORTED BY SLOPING BACK AT 2:1 OR OTHER ACCEPTABLE METHOD.

NOMINAL DIAMETER (IN)	MIN. TRENCH WIDTH (IN)
4	21
6	23
8	25
10	28
12	31
15	34
18	39
24	48
30	66
36	78
42	83
48	89
60	102

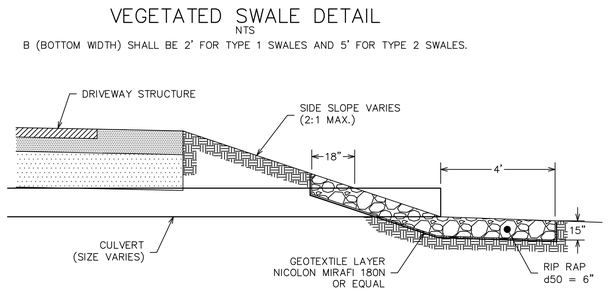

CULVERT INLET/OUTLET PROTECTION DETAIL

(NTS)

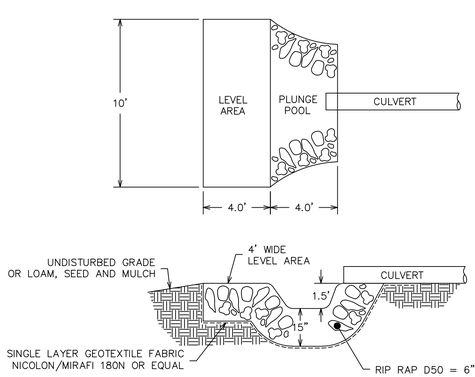

LEVEL SPREADER

(NTS)

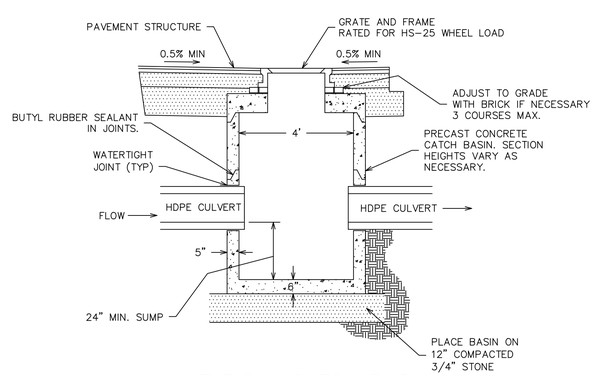

TYPICAL CATCH BASIN

(NTS)

NO.	DESCRIPTION	DATE	
	REVISIONS		

SITE DETAILS
BERWICK SENIOR HOUSING
20 WILSON STREET, BERWICK, MAINE

FOR: THE HOUSING PARTNERSHIP
P.O. BOX 466
PORTSMOUTH, NH 03802

ATTAR ENGINEERING, INC.
CIVIL ◆ STRUCTURAL ◆ MARINE
1284 STATE ROAD – ELIOT, MAINE 03903
PHONE: (207)439-6023 FAX: (207)439-2128

SCALE: AS NOTED	APPROVED BY:	DRAWN BY: EAB
DATE: 9/15/16		REVISION : DATE – : –
JOB NO: C099-16	CAD FILE: BSH_DET	SHEET 6

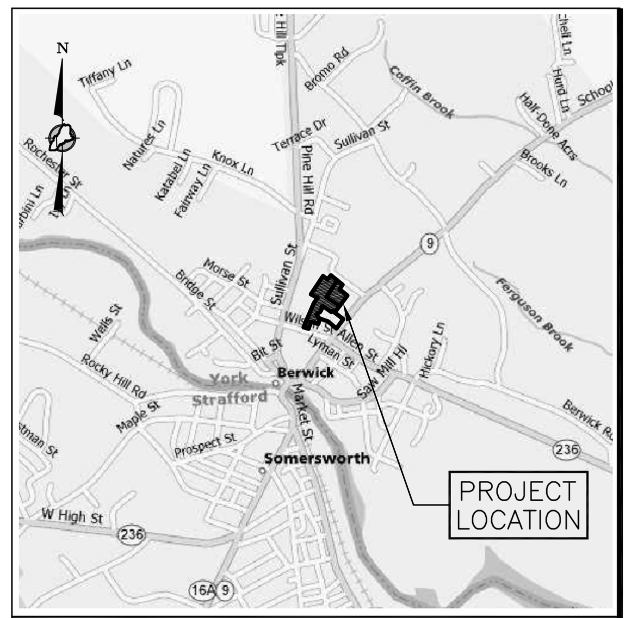

VICINITY MAP
N.T.S.

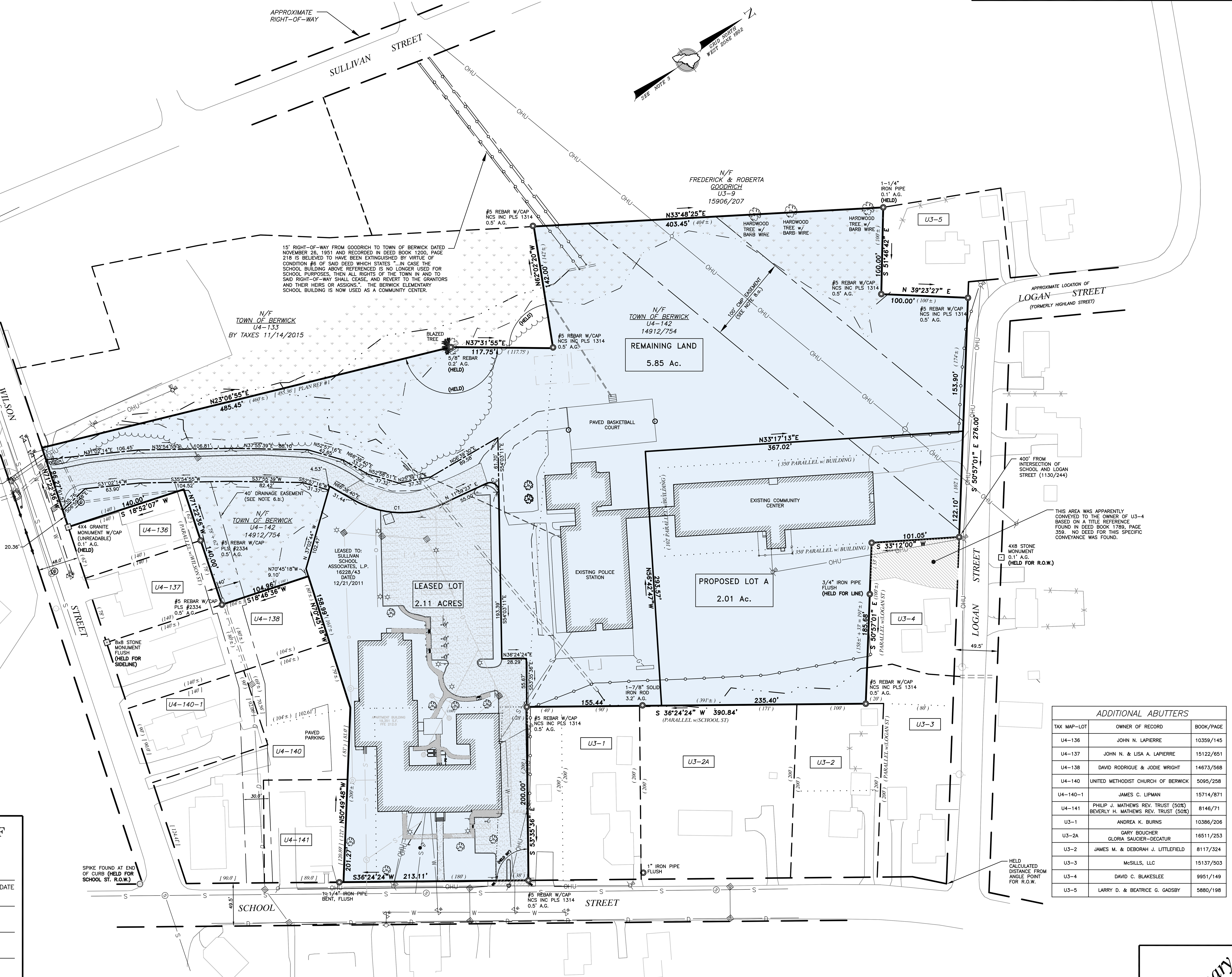

ZONING NOTES

THE PARCEL SURVEYED IS LOCATED IN THE COMMERCIAL/INDUSTRIAL ZONE/DISTRICT. PORTION OF BULK & SPACE REQUIREMENTS ARE AS FOLLOWS:

MINIMUM LOT FRONTAGE = 100'
SETBACKS:
FRONT = 25'
SIDE = 15'
REAR = 25'

OTHER MUNICIPAL AND STATE OVERLAY ZONES MAY EXIST AND APPLY. BEFORE PROCEEDING ON ANY PROJECT WE RECOMMEND VERIFYING CURRENT ZONE AND ALL APPLICABLE SETBACKS AND RESTRICTIONS WITH THE APPROPRIATE AGENCIES.

LEGEND

FOUND IRON (SIZE & TYPE AS NOTED)
FOUND MONUMENT (SIZE & TYPE AS NOTED)
UTILITY POLE (NUMBER AS NOTED)
GUY WIRE ANCHOR
FOUND DECIDUOUS TREE (SIZE & TYPE AS NOTED)
FOUND CONIFEROUS TREE (SIZE & TYPE AS NOTED)
TREE LINE (APPROXIMATE)
BOUNDARY LINE
EASEMENT LINE
EDGE OF GRAVEL
EDGE OF PAVEMENT
RIGHT-OF-WAY LINE
ABUTTER LINE
BUILDING SETBACK
OHU — OVERHEAD UTILITY
N/F — NOW OR FORMERLY OWNED BY
1234/567 — DEED BOOK AND PAGE (YCRD)
12-34 — TAX MAP-LOT
(123.45') — PARENTHESIS DENOTE RECORD DATA

BOUNDARY NOTES

1. RECORD OWNER OF THE PARCEL SURVEYED IS THE INHABITANTS OF THE TOWN OF BERWICK AS DESCRIBED IN THE A DEED FROM MAINE SCHOOL ADMINISTRATIVE DISTRICT NO. 60 DATED JULY 19, 2006 AND RECORDED IN DEED BOOK 14912, PAGE 754., YORK COUNTY REGISTRY OF DEEDS.

2. THE PARCEL SURVEYED IS IDENTIFIED ON THE CITY/TOWN OF BERWICK TAX ASSESSOR'S MAP U4, PARCEL 142.

3. THE BEARINGS SHOWN ON THIS PLAN ARE BASED ON THE MAINE STATE COORDINATE SYSTEM, WEST ZONE 1802, GRID NORTH.

4. REFERENCE IS MADE TO THE FOLLOWING PLANS:
   a. "AS-BUILT ALTA/ACSM LAND TITLE SURVEY, 45 SCHOOL STREET, BERWICK, MAINE" BY NORTHEAST CIVIL SOLUTIONS, INC., DATED JUNE 12, 2013, PROJECT NO. 31142.1
   b. "BOUNDARY SURVEY, 45 SCHOOL STREET, BERWICK, MAINE" BY NORTHEAST CIVIL SOLUTIONS, INC., DATED FEBRUARY 25, 2010, PROJECT NO. 31142.1
   c. "PLAN OF PROPERTY IN BERWICK, MAINE FOR PRIME TANNING COMPANY" BY H.I. & E.C. JORDAN, DATED DECEMBER 4, 1979, RECORDED IN PLAN BOOK 103, PAGE 17.
   d. "PROPERTY NOW OR FORMERLY OF BERWICK METHODIST CHURCH AND R.W. SPENCE, BERWICK, MAINE" BY G. MAYNARD TRAFTON, DATED SEPTEMBER, 1960, UNRECORDED.
   e. "PLAN DEPICTING BOUNDARIES BETWEEN LANDS OF MAINE SCHOOL ADMINISTRATIVE DISTRICT #60 AND FRANCIS A. & MARTHA M. LAPIERRE, WILSON STREET, BERWICK, MAINE" BY CIVIL CONSULTANTS, DATED MAY 22, 1992, UNRECORDED.
   f. "PLAN OF LAND, MAP U4, PARCEL 137, 14 WILSON STREET, BERWICK, MAINE" BY KIMBALL SURVEY AND DESIGN, INC., DATED AUGUST 12, 2016, UNRECORDED.
   g. "RIGHT-OF-WAY MAP, STATE HIGHWAY 6, FEDERAL AID PROJECT NO. F-06-1(4)" BY MAINE STATE HIGHWAY COMMISSION, DATED MARCH, 1961, RECORDED IN PLAN BOOK 34, PAGE 49.
   h. "RIGHT-OF-WAY MAP, STATE HIGHWAY 6, STORM SEWER OUTFALL, F.A.P. NO. F-06-1(4)" BY MAINE STATE HIGHWAY COMMISSION, DATED MARCH, 1961.

5. THE WIDTH OF SCHOOL STREET IS 3 RODS (49.5') BASED ON THE PLAN REFERENCED IN NOTE 4.g. THE LAYOUT OF THE RIGHT-OF-WAY LIMITS IS BASED ON THE SAME PLAN.

   THE WIDTH OF WILSON STREET IS 48' BASED ON THE PLAN REFERENCED IN NOTE 4.c. THE LAYOUT IS BASED ON MONUMENTATION FOUND.

   THE WIDTH OF LOGAN STREET IS ASSUMED TO BE 3 RODS (49.5'). NO OFFICIAL INFORMATION WAS AVAILABLE AT THE TOWN. THE LAYOUT IS BASED ON MONUMENTATION FOUND.

6. REFERENCE IS MADE TO THE FOLLOWING EASEMENTS OF RECORD:
   a. EASEMENT FROM WILLIAM C. McCUE & CLARA A.L. McCUE TO CUMBERLAND COUNTY LIGHT AND POWER DATED NOVEMBER 17, 1938 AND RECORDED IN DEED BOOK 927, PAGE 348.
   b. APPARENT DRAINAGE EASEMENT SHOWN ON THE PLAN REFERENCED IN NOTE 4.h. NO RECORDED DOCUMENT WAS FOUND FOR THIS EASEMENT.
   c. EASEMENT FROM MSAD #60 TO CENTRAL MAINE POWER COMPANY AND NEW ENGLAND TELEPHONE & TELEGRAPH COMPANY DATED AUGUST 18, 1988 AND RECORDED IN DEED BOOK 4873, PAGE 056.
   d. EASEMENT FROM THE BOARD OF SCHOOL DIRECTORS OF THE SCHOOL ADMINISTRATIVE DISTRICT #60 TO CENTRAL MAINE POWER COMPANY AND NEW ENGLAND TELEPHONE & TELEGRAPH COMPANY, DATED MARCH 31, 1969 AND RECORDED IN DEED BOOK 1844, PAGE 083.

7. THE UTILITIES SHOWN ON THIS PLAN WERE FROM FIELD OBSERVATION ONLY. THERE MAY BE OTHER UTILITIES EXISTING THAT ARE NOT SHOWN. CONTACT DIG-SAFE (888)DIG-SAFE PRIOR TO ANY EXCAVATION WORK.

8. IN LIGHT OF EVIDENCE SHOWN ON UNRECORDED PLANS REFERENCED IN NOTES 4.d., 4.e. & 4.f., RECENTLY PROVIDED TO NCS, THE SOUTHERLY AND WESTERLY BOUNDARY LINES OF THE OVERALL TOWN PROPERTY HAS BEEN MODIFIED FROM THE PLANS REFERENCED IN NOTE 4.a. & 4.b.

9. THE PURPOSE/INTENT OF THIS PLAN IS TO CREATE PROPOSED LOT A OUT OF THE OVERALL PARCEL. SINCE THE LEASED LOT WAS CREATED WITHIN THE LAST 5 YEARS, THE CREATION OF PROPOSED LOT A WOULD RESULT IN 3 LOTS OUT OF THE PROPERTY IN THE LAST 5 YEARS, THUS REQUIRING SUBDIVISION APPROVAL.

ADDITIONAL ABUTTERS

TAX MAP-LOT	OWNER OF RECORD	BOOK/PAGE
U4-136	JOHN N. LAPIERRE	10359/145
U4-137	JOHN N. & LISA A. LAPIERRE	15122/651
U4-138	DAVID RODRIGUE & JODIE WRIGHT	14673/568
U4-140	UNITED METHODIST CHURCH OF BERWICK	5095/258
U4-140-1	JAMES C. LIPMAN	15714/871
U4-141	PHILIP J. MATHEWS REV. TRUST (50%) BEVERLY H. MATHEWS REV. TRUST (50%)	8146/71
U3-1	ANDREA K. BURNS	10386/206
U3-2A	GARY BOUCHER GLORIA SAUCIER-DECATUR	16511/253
U3-2	JAMES M. & DEBORAH J. LITTLEFIELD	8117/324
U3-3	McSILLS, LLC	15137/503
U3-4	DAVID C. BLAKESLEE	9951/149
U3-5	LARRY D. & BEATRICE G. GADSBY	5880/198

CURVE TABLE

CURVE	LENGTH	RADIUS	CHORD LENGTH	CHORD BEARING
C1	107.79'	113.00'	103.75'	N39°19'01"E
C2	19.89'	10.00'	16.77'	N68°58'06"E

APPROVED BY THE TOWN OF BERWICK PLANNING BOARD

CHAIRPERSON ______ DATE

______

______

______

______

______

Revision:	By:	Date:	Change:

PROJECT: 31142.02 | DRAWING NAME: 31142-02
DATE: SEPTEMBER 30, 2016 | SCALE: 1"=60' | DRAWN BY: JAP
FIELDED BY: JAP /JAM | FIELD DATE: DEC. 2011 | CHECKED BY: TFM

Drawing Name and Location:
SUBDIVISION PLAN - BERWICK SENIOR HOUSING
20 WILSON STREET, BERWICK, MAINE

Owner:
TOWN OF BERWICK
SULLIVAN SQUARE, BERWICK, MAINE 03901

Prepared For:
ATTAR ENGINEERING
1284 STATE ROAD, ELIOT, MAINE 03903

Preliminary

SURVEYING • ENGINEERING • LAND PLANNING
Northeast Civil Solutions
INCORPORATED
381 PAYNE ROAD, SCARBOROUGH, MAINE 04074
tel 207.883.1000 800.882.2227
fax 207.883.1001
e-mail / website info@northeastcivilsolutions.com www.northeastcivilsolutions.com

0 60' 120' 240'

E:\Land Projects\31000\31142--02 Attar Eng-Berwick\dwg\31142-02.dwg