Design for Code Acceptance 3

Fire-Resistance-Rated Wood-Frame Wall and Floor/Ceiling Assemblies

Building Code Requirements

For occupancies such as stores, apartments, offices, and other commercial and industrial uses, building codes commonly require floor/ceiling and wall assemblies to be fire-resistance rated in accordance with standard fire tests. This document is intended to aid in the design of various wood-frame walls and wood-frame floor/ceiling assemblies, where such assemblies are required by code to be fire-resistance-rated.

Depending on the application, wall assemblies may need to be fire-resistance-rated for exposure from either one side or both sides. Exterior walls are required to be rated for both interior and exterior fire exposure where the wall has a fire separation distance of 10 feet or less. For exterior walls with a fire separation distance of greater than 10 feet, the required fire-resistance-rating applies only to exposure from the interior. The designer should note that some state and local building code amendments may require fire resistance rating for exposure from both sides of exterior walls, regardless of fire separation distance; however, the solutions and example details provided in this document are based on compliance with national model building codes.

Code recognition of one and two-hour wood-frame wall systems is also predicated on successful fire and hose stream testing in accordance with ASTM E119, *Standard Test Methods for Fire Tests of Building Construction Materials*.

Fire Tested Assemblies

Fire-resistance-rated wood-frame assemblies can be found in a number of sources including the *International Building Code (IBC)*, Underwriters Laboratories (UL) *Fire Resistance Directory*, Intertek Testing Services' *Directory of Listed Products*, and the Gypsum Association's *Fire Resistance Design Manual* (GA 600). The American Wood Council (AWC) and its members have tested a number of wood-frame fire-resistance-rated assemblies (see photos). Descriptions of successfully tested lumber wall assemblies are provided in Table 1 for one-hour fire-resistance-rated wall assemblies and Table 2 for two-hour fire-resistance-rated wall assemblies. Lumber shall be identified by the grade mark of a lumber grading or inspection agency that has been approved by an accreditation body that complies with the *American Softwood Lumber Standard (PS 20)*. The fire-resistance-rated assemblies described in this document, as well as those listed in other sources are not species- or grade-specific unless specifically noted as such.

Descriptions of successfully tested I-joist floor assemblies are provided in Table 3 for one-hour fire-resistance-rated floor/ceiling assemblies and Table 4 for two-hour fire-resistance-rated floor/ceiling assemblies. I-joists are required to comply with ASTM D5055, *Standard Specification for Establishing and Monitoring Structural Capacities of Prefabricated Wood I-Joists*.

Exterior Wall - Floor Intersection Details

Example details for code-compliant exterior wall-floor intersections in Type III-A platform construction are provided in Figures 1A through 1C. An example detail for an exterior wall-floor intersection in Type III-B construction is provided in Figure 2.

Conclusions

Wood-frame assemblies are used in architectural designs because of their adaptability to style preferences, ease and economies of construction, environmental attributes, and energy-saving performance. To fully realize the advantages of wood-frame construction in buildings that require fire-resistance-rated assemblies, a variety of wood-frame wall and floor/ceiling assemblies have been successfully tested and shown to meet either a one-hour or two-hour fire-resistance rating. This document is intended to assist building designers with fire-resistance requirements by providing details of tested assemblies, along with corresponding STC and IIC sound ratings for floor/ceiling assemblies. Examples of exterior wall-floor intersection details for Type III construction are also provided.

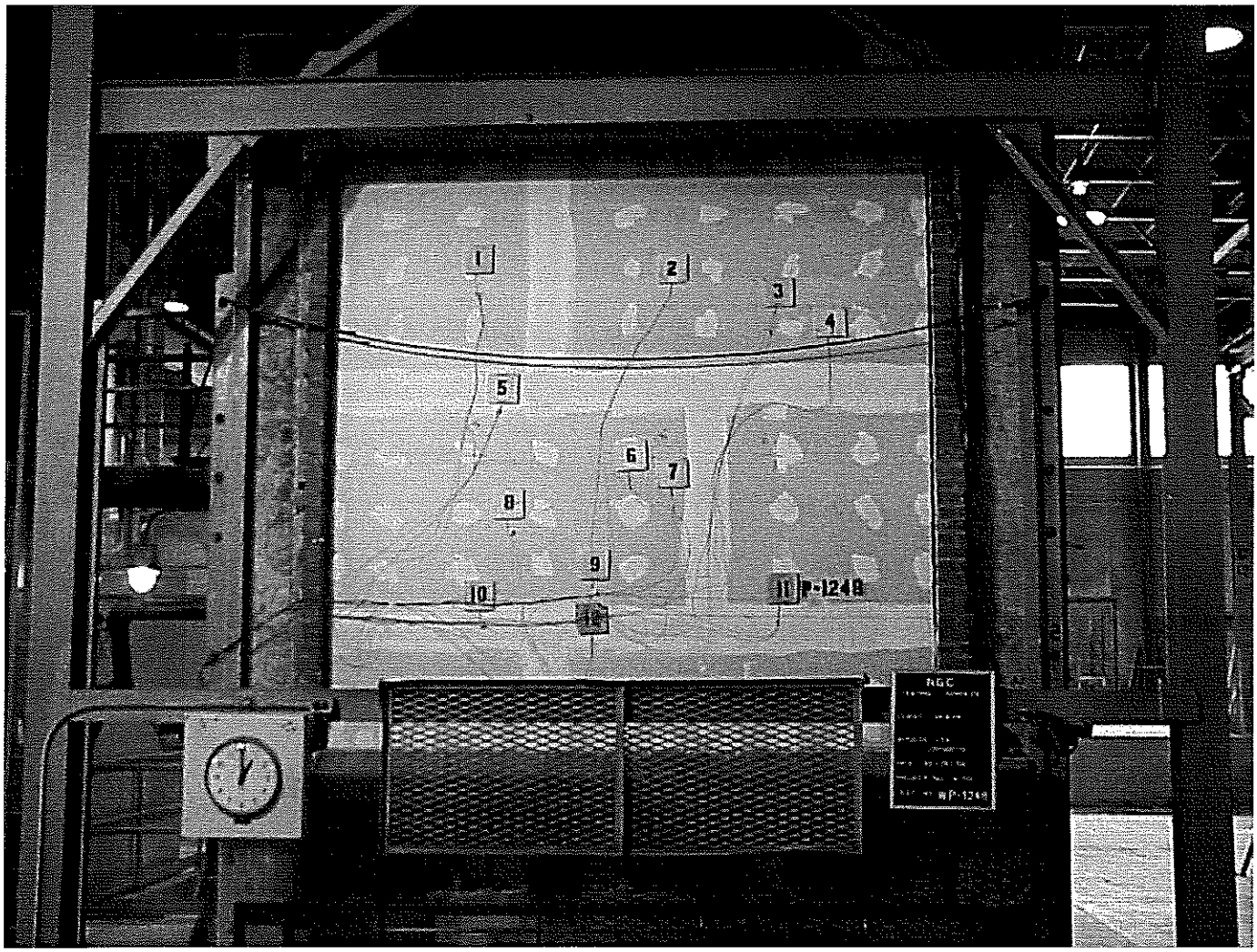

ASTM E 119 fire test on wall assembly Detail WS4-1.1 at 100% design load after one hour of fire exposure.

Table 1 One-Hour Fire-Resistance-Rated Loadbearing Wood-Frame Wall Assemblies

Assemblies Rated from Both Sides

Studs	Insulation	Sheathing on Both Sides	Fasteners	Details
2x4 @ 16" o.c.	3½" mineral wool batts	5/8" Type X Gypsum Wallboard (H)	2¼" #6 Type S drywall screws @ 12" o.c.	WS4-1.1
2x6 @ 16" o.c.	(none)	5/8" Type X Gypsum Wallboard (H)	2¼" #6 Type S drywall screws @ 7" o.c.	WS6-1.1
2x6 @ 16" o.c.	5½" mineral wool batts	5/8" Type X Gypsum Wallboard (H)	2¼" #6 Type S drywall screws @ 12" o.c.	WS6-1.2
2x6 @ 16" o.c.	R-19 fiberglass insulation	5/8" Type X Gypsum Wallboard (V)	2¼" #6 Type S drywall screws @ 12" o.c.	WS6-1.4

Assemblies Rated from One Side (Fire on Interior Only)

Studs	Insulation		Sheathing	Fasteners	Details
2x4 @ 16" o.c.	3½" mineral wool batts	I	5/8" Type X Gypsum Wallboard (H)	2¼" #6 Type S drywall screws @ 12" o.c.	WS4-1.2
		E	3/8" wood structural panels (V)	6d common nails @ 6" edges/12" field	
2x4 @ 16" o.c.	4 mil polyethylene 3½" mineral wool batts	I	5/8" Type X Gypsum Wallboard (V)	6d cement coated box nails @ 7" o.c.	WS4-1.3
		E	½" fiberboard (V)	1½" roofing nails @ 3" edges/6" field	
			3/8" hardboard shiplapped panel siding	8d galv. nails @ 4" edges/8" field	
2x6 @ 16" o.c.	5½" mineral wool batts	I	5/8" Type X Gypsum Wallboard (H)	2¼" #6 Type S drywall screws @ 12" o.c.	WS6-1.3
		E	7/16" wood structural panels (V)	6d common nails @ 6" edges/12" field	
2x6 @ 16" o.c.	R-19 fiberglass insulation	I	5/8" Type X Gypsum Wallboard (V)	2¼" #6 Type S drywall screws @ 7" o.c.	WS6-1.5
		E	3/8" wood structural panels (V)	6d common nails @ 6" edges/12" field	

H - applied horizontally with vertical joints over studs **I** - Interior sheathing
V - applied vertically with vertical joints over studs **E** - Exterior sheathing

Table 2 Two-Hour Fire-Resistance-Rated Loadbearing Wood-Frame Wall Assemblies

Assemblies Rated from Both Sides

Studs	Insulation		Sheathing on Both Sides	Fasteners	Details
2x6 @ 24" o.c.	5½" mineral wool batts	B	5/8" Type X Gypsum Wallboard (H)	2¼" #6 Type S drywall screws @ 24" o.c.	WS6-2.1
		F	5/8" Type X Gypsum Wallboard (H)	2¼" #6 Type S drywall screws @ 8" o.c.	

H - applied horizontally with vertical joints over studs;
B - Base layer sheathing; **F** - Face layer sheathing

Table 3 One-Hour Fire-Resistance-Rated Wood Floor/Ceiling Assemblies

Wood I-Joist Assemblies						
Joists	Insulation	Furring	Ceiling Sheathing		Fasteners	Details
I-joists @ 24" o.c. Min. flange depth: 1-1/2" Min. flange area: 5.25 sq. in. Min. web thickness: 3/8" Min. I-joist depth: 9-1/4"	1-1/2" mineral wool batts (2.5 pcf-nominal) Resting on hat-shaped channels	Hat-shaped channels	F	5/8" Type C Gypsum Wallboard (GWB)	1-1/8" Type S drywall screws spaced 12" o.c. in GWB field spaced 8" o.c. at GWB end joints *(see fastening details)*	WIJ-1.1
I-joists @ 24" o.c. Min. flange depth: 1-1/2" Min. flange area: 5.25 sq. in. Min. web thickness: 7/16" Min. I-joist depth: 9-1/4"	1-1/2" mineral wool batts (2.5 pcf-nominal) Resting on resilient channels	Resilient channels	F	5/8" Type C Gypsum Wallboard (GWB)	1" Type S drywall screws spaced 12" o.c. in GWB field spaced 8" o.c. at GWB end joints *(see fastening details)*	WIJ-1.2
I-joists @ 24" o.c. Min. flange depth: 1-5/16" Min. flange area: 2.25 sq. in. Min. web thickness: 3/8" Min. I-joist depth: 9-1/4"	2" mineral wool batts (3.5 pcf-nominal) Resting on 1x4 setting strips	Resilient channels	F	5/8" Type C Gypsum Wallboard (GWB)	1-1/8" Type S drywall screws spaced 7" o.c. in GWB field spaced 7" o.c. at GWB end joints *(see fastening details)*	WIJ-1.3
I-joists @ 24" o.c. Min. flange depth: 1-1/2" Min. flange area: 3.45 sq. in. Min. web thickness: 3/8" Min. I-joist depth: 9-1/4"	1" mineral wool batts (6 pcf-nominal) Resting on hat-shaped channels under I-joist bottom flange	Hat-shaped channels supported by CSC clips	F	1/2" Type C Gypsum Wallboard (GWB)	1" Type S drywall screws spaced 12" o.c. in GWB field spaced 6" o.c. at GWB end joints *(see fastening details)*	WIJ-1.4
I-joists @ 24" o.c. Min. flange depth: 1-1/2" Min. flange area: 2.25 sq. in. Min. web thickness: 3/8" Min. I-joist depth: 9-1/4"	(none)	(none)	B	1/2" Type C Gypsum Wallboard (GWB)	1" Type S drywall screws spaced 12" o.c. in GWB field spaced 12" o.c. at GWB end joints	WIJ-1.5
			F	1/2" Type C Gypsum Wallboard (GWB)	1-5/8" Type S drywall screws spaced 12" o.c. in GWB field spaced 8" o.c. at GWB end joints 1-1/2" Type G drywall screws spaced 8" o.c. at GWB end joints *(see fastening details)*	
I-joists @ 24" o.c. Min. flange depth: 1-5/16" Min. flange area: 1.95 sq. in. Min. web thickness: 3/8" Min. I-joist depth: 9-1/2"	(none)	Resilient channels	B	1/2" Type X Gypsum Wallboard (GWB)	1-1/4" Type S drywall screws spaced 12" o.c. in GWB field spaced 12" o.c. at GWB end joints	WIJ-1.6
			F	1/2" Type X Gypsum Wallboard (GWB)	1-5/8" Type S drywall screws spaced 12" o.c. in GWB field spaced 12" o.c. at GWB end joints 1-1/2" Type G drywall screws spaced 8" o.c. at GWB end joints *(see fastening details)*	
I-joists @ 24" o.c. Min. flange depth: 1-1/2" Min. flange area: 2.25 sq. in. Min. web thickness: 3/8" Min. I-joist depth: 9-1/2"	Fiberglass batts Resting on resilient channels	Resilient channels	B	1/2" Type X Gypsum Wallboard (GWB)	1-1/4" Type S drywall screws spaced 12" o.c. in GWB field spaced 12" o.c. at GWB end joints	WIJ-1.7
			F	1/2" Type X Gypsum Wallboard (GWB)	1-5/8" Type S drywall screws spaced 12" o.c. in GWB field spaced 12" o.c. at GWB end joints 1-1/2" Type G drywall screws spaced 8" o.c. at GWB end joints *(see fastening details)*	

B - Base layer sheathing; F - Face layer sheathing

Table 4 Two-Hour Fire-Resistance-Rated Wood Floor/Ceiling Assemblies

Wood I-Joist Assemblies						
Joists	Insulation	Furring		Ceiling Sheathing	Fasteners	Details
I-joists @ 24" o.c. Min. flange depth: 1-1/2" Min. flange area: 2.25 sq. in. Min. web thickness: 3/8" Min. I-joist depth: 9-1/4"	3-1/2" fiberglass insulation Supported by stay wires spaced 12" o.c.	(none)	B	5/8" Type C Gypsum Wallboard (GWB)	1-5/8" Type S drywall screws spaced 12" o.c. in GWB field spaced 12" o.c. at GWB end joints	WIJ-2.1
		Hat-shaped channels	M	5/8" Type C Gypsum Wallboard (GWB)	1" Type S drywall screws spaced 12" o.c. in GWB field spaced 12" o.c. at GWB end joints	
			F	5/8" Type C Gypsum Wallboard (GWB)	1-5/8" Type S drywall screws spaced 8" o.c. in GWB field spaced 8" o.c. at GWB end joints *(see fastening details)*	
B - Base layer sheathing (direct attached); M - Middle layer sheathing; F - Face layer sheathing						

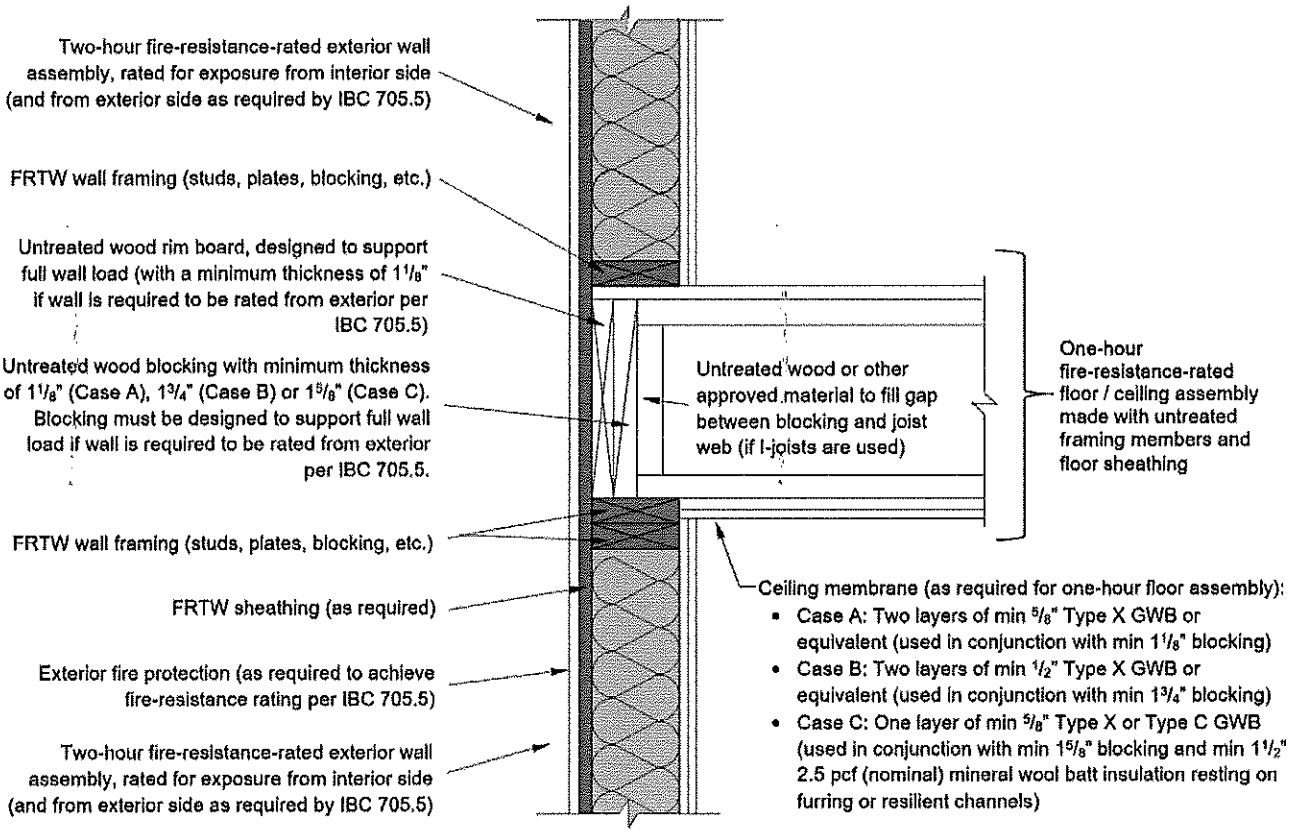

Figure 1A: Example detail for Type III-A exterior wall–floor intersection with rim board and blocking

Methodology:

Fire-resistance for exposure from interior side:

- Case A: Minimum $1^1/_8$-inch-thick wood blocking plus two layers of minimum $^5/_8$ in. Type X GWB in the ceiling membrane provides 2 hours of protection to the rim board, based on the NDS-calculated time for the char depth to reach the rim board / blocking interface plus 40 minutes for each layer of $^5/_8$ in. Type X GWB (per IBC Table 722.6.2(1)).
- Case B: Minimum $1^3/_4$-inch-thick wood blocking plus two layers of minimum $^1/_2$ in. Type X GWB in the ceiling membrane provides 2 hours of protection to the rim board, based on the NDS-calculated time for the char depth to reach the rim board / blocking interface plus 25 minutes for each layer of $^1/_2$ in. Type X GWB (per IBC Table 722.6.2(1)).
- Case C: Minimum $1^5/_8$-inch-thick wood blocking plus one layer of minimum $^5/_8$ in. Type X GWB in the ceiling membrane plus minimum $1^1/_2$-inch-thick, 2.5 pcf (nominal) mineral wool batt insulation provides 2 hours of protection to the rim board, based on the NDS-calculated time for the char depth to reach the rim board / blocking interface, plus 40 minutes for the $^5/_8$ in. Type X GWB (per IBC Table 722.6.2(1)), plus 15 minutes for the mineral wool insulation.

The rim board must be designed to support the load from the wall above.

Fire-resistance for exposure from exterior side (where required per IBC Section 705.5): A combination of exterior fire protection, FRTW sheathing, and minimum $1^1/_8$-inch-thick rim board is used to provide two hours of protection to the wood blocking. Layers to the exterior of the rim board (e.g., exterior fire protection, FRTW sheathing, etc.) must be sufficient to provide at least 80 minutes of protection to the rim board. The wood blocking must be designed to support the load from the wall above.

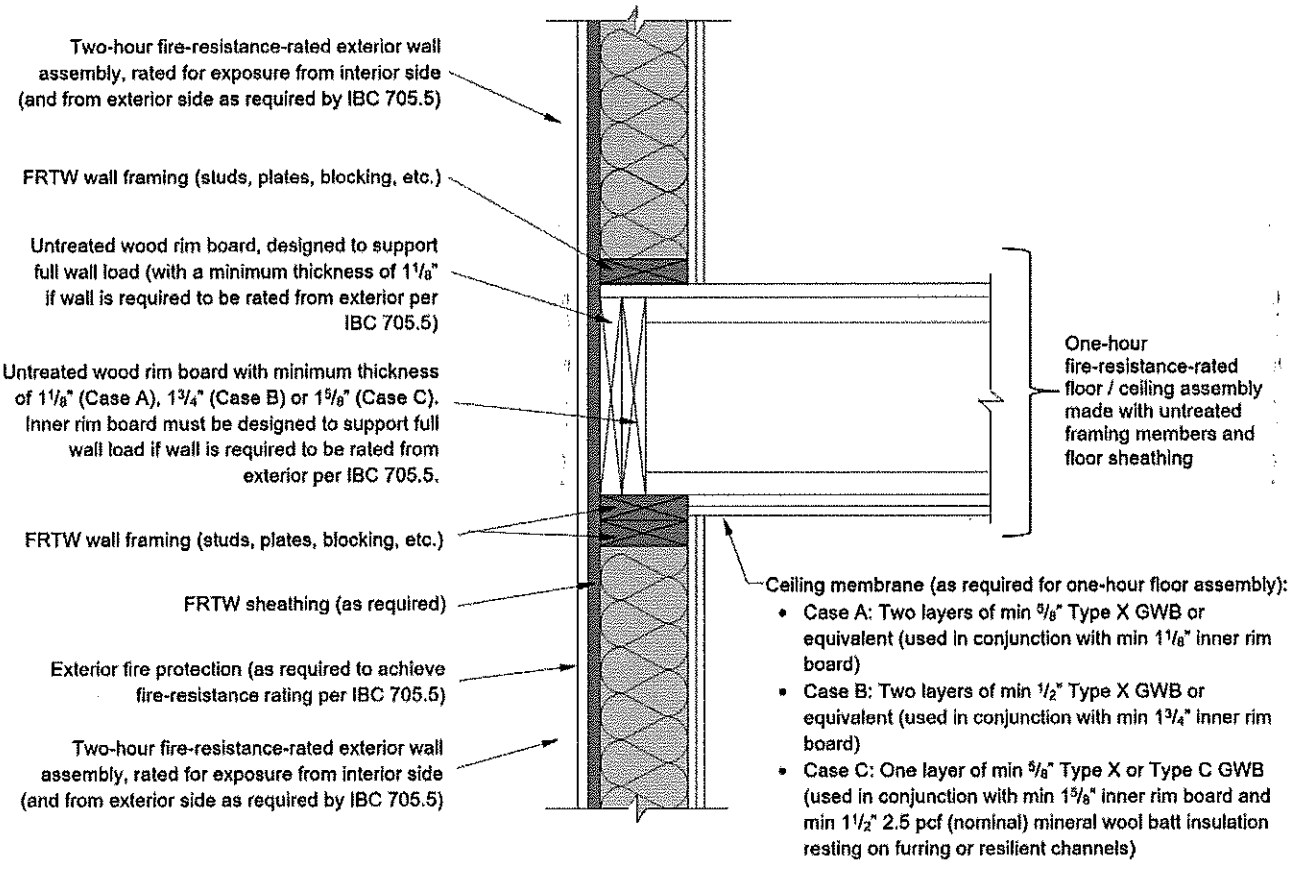

Figure 1B: Example detail for Type III-A exterior wall–floor intersection with two rim boards

Methodology:

Fire-resistance for exposure from interior side:

- Case A: Minimum $1^1/_8$-inch-thick inner rim board plus two layers of minimum $^5/_8$ in. Type X GWB in the ceiling membrane provides 2 hours of protection to the outer rim board, based on the NDS-calculated time for the char depth to reach the inner rim board / outer rim board interface plus 40 minutes for each layer of $^5/_8$ in. Type X GWB (per IBC Table 722.6.2(1)).
- Case B: Minimum $1^3/_4$-inch-thick inner rim board plus two layers of minimum $^1/_2$ in. Type X GWB in the ceiling membrane provides 2 hours of protection to the outer rim board, based on the NDS-calculated time for the char depth to reach the inner rim board / outer rim board interface plus 25 minutes for each layer of $^1/_2$ in. Type X GWB (per IBC Table 722.6.2(1)).
- Case C: Minimum $1^5/_8$-inch-thick inner rim board plus one layer of minimum $^5/_8$ in. Type X GWB in the ceiling membrane plus minimum $1^1/_2$-inch-thick, 2.5 pcf (nominal) mineral wool batt insulation provides 2 hours of protection to the outer rim board, based on the NDS-calculated time for the char depth to reach the inner rim board / outer rim board interface, plus 40 minutes for the $^5/_8$ in. Type X GWB (per IBC Table 722.6.2(1)), plus 15 minutes for the mineral wool insulation.

The outer rim board must be designed to support the load from the wall above.

Fire-resistance for exposure from exterior side (where required per IBC Section 705.5): A combination of exterior fire protection, FRTW sheathing, and minimum $1^1/_8$-inch-thick outer rim board is used to provide two hours of protection to the inner rim board. Layers to the exterior of the outer rim board (e.g., exterior fire protection, FRTW sheathing, etc.) must be sufficient to provide at least 80 minutes of protection to the outer rim board. The inner rim board must be designed to support the load from the wall above.

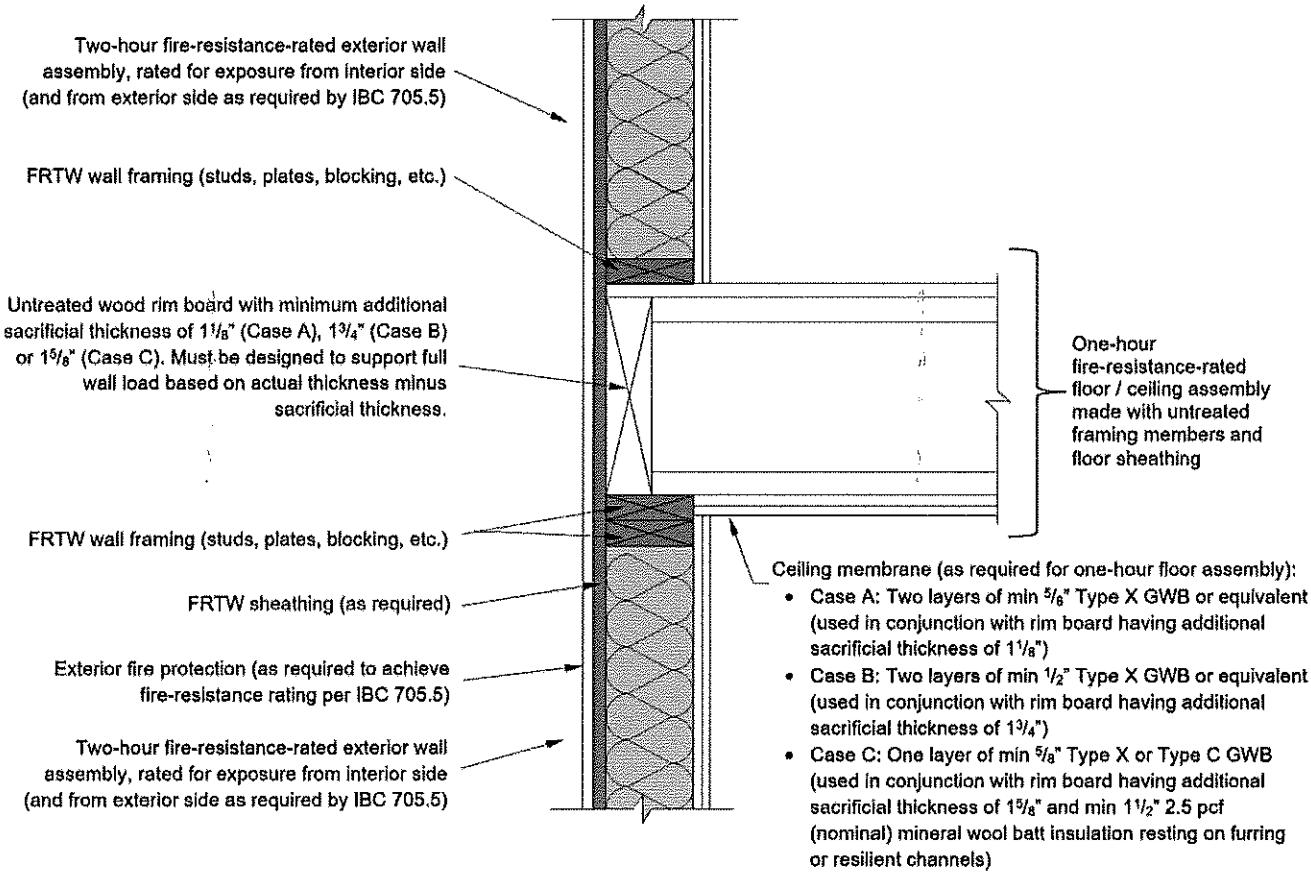

Figure 1C: Example detail for Type III-A exterior wall–floor intersection with single rim board

Methodology:

Fire-resistance for exposure from interior side:

- Case A: The minimum $1^1/_8$-inch additional sacrificial rim board thickness plus two layers of minimum $^5/_8$ in. Type X GWB in the ceiling membrane provides 2 hours of protection to the remaining rim board section, based on the NDS-calculated time for the char depth to reach $1^1/_8$-inch within the rim board plus 40 minutes for each layer of $^5/_8$ in. Type X GWB (per IBC Table 722.6.2(1)).
- Case B: The minimum $1^3/_4$-inch additional sacrificial rim board thickness plus two layers of minimum $^1/_2$ in. Type X GWB in the ceiling membrane provides 2 hours of protection to the remaining rim board section, based on the NDS-calculated time for the char depth to reach $1^3/_4$-inch within the rim board plus 25 minutes for each layer of $^1/_2$ in. Type X GWB (per IBC Table 722.6.2(1)).
- Case C: The minimum $1^5/_8$-inch additional sacrificial rim board thickness plus one layer of minimum $^5/_8$ in. Type X GWB in the ceiling membrane plus minimum $1^1/_2$-inch-thick, 2.5 pcf (nominal) mineral wool batt insulation provides 2 hours of protection to the remaining rim board section, based on the NDS-calculated time for the char depth to reach $1^5/_8$-inch within the rim board, plus 40 minutes for the $^5/_8$ in. Type X GWB (per IBC Table 722.6.2(1)), plus 15 minutes for the mineral wool insulation.

The remaining thickness of rim board (i.e., total thickness minus sacrificial thickness) must be designed to support the load from the wall above.

Fire-resistance for exposure from exterior side (where required per IBC Section 705.5): A combination of exterior fire protection, FRTW sheathing, and the additional $1^1/_8$-inch sacrificial wood thickness is used to provide two hours of protection. Layers to the exterior of the rim board (e.g., exterior fire protection, FRTW sheathing, etc.) must be sufficient to provide at least 80 minutes of protection to the rim board. The remaining thickness of rim board (i.e., total thickness minus sacrificial thickness) must be designed to support the load from the wall above.

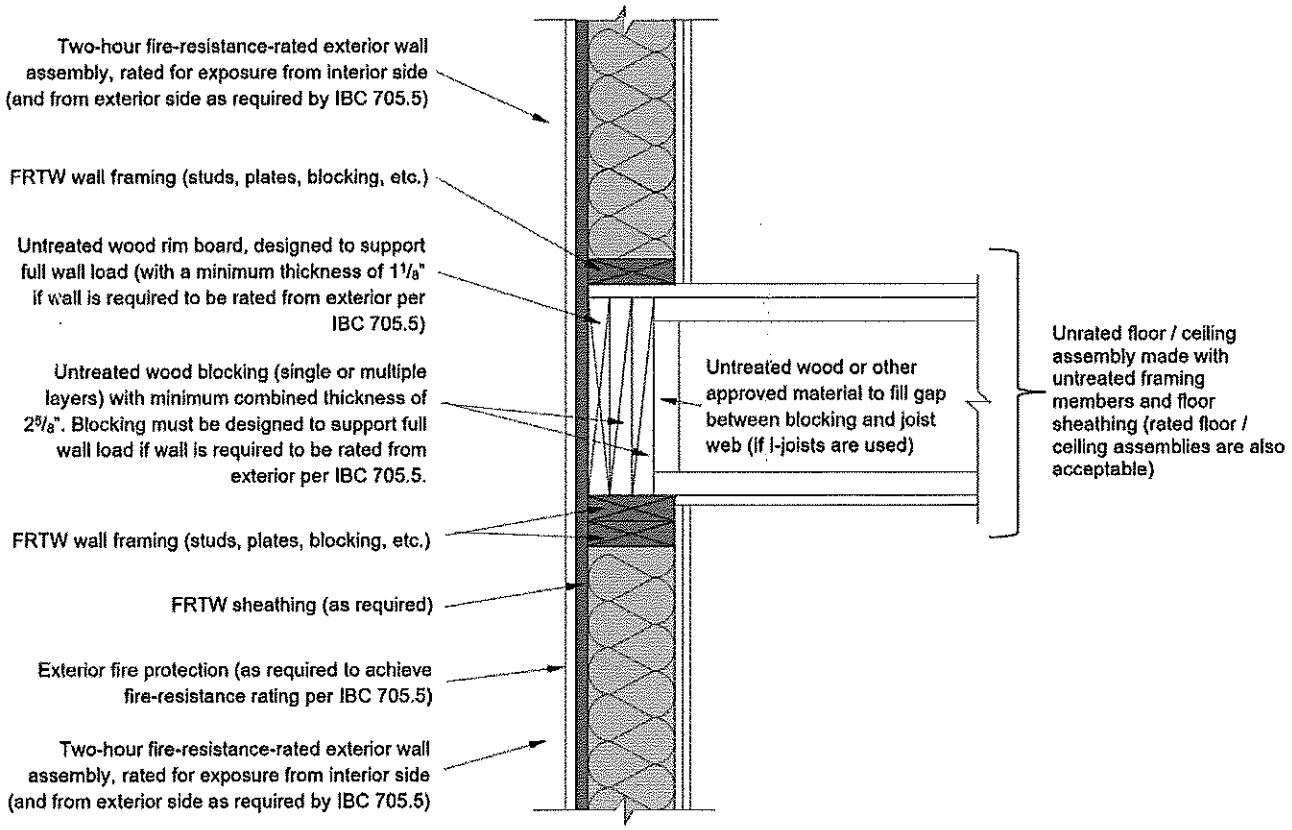

Figure 2: Example detail for Type III-B exterior wall–floor intersection with rim board and blocking

Methodology:

Fire-resistance for exposure from interior side: One or two layers of blocking with a minimum combined thickness of $2^5/_8$ inches provides 2 hours of protection to the rim board based on the NDS-calculated time for the char depth to reach the rim board / blocking interface. Additional protection from the ceiling membrane (if any) is neglected. (Continuous rim board may be used in lieu of the blocking depicted in this example, provided it meets the minimum thickness requirement and the minimum bearing length requirements of the joists are met.) The wood rim board must be designed to support the load from the wall above.

Fire-resistance for exposure from exterior side (where required per IBC Section 705.5): A combination of exterior fire protection, FRTW sheathing, and minimum $1^1/_8$-inch-thick rim board is used to provide two hours of protection to the wood blocking. Layers to the exterior of the rim board (e.g., exterior fire protection, FRTW sheathing, etc.) must be sufficient to provide at least 80 minutes of protection to the rim board. The wood blocking must be designed to support the load from the wall above.

While every effort has been made to insure the accuracy of the information presented, the American Wood Council and its members do not assume responsibility for a particular design prepared from this publication.

For additional information or assistance contact:

American Wood Council
222 Catoctin Circle SE, Suite 201
Leesburg, VA 20175
http://www.awc.org/
info@awc.org
202-463-2766

Copyright © 2018 American Wood Council
January 2009, March 2010 & June 2017 Revisions

WS4-1.1 One Hour Fire-Resistance-Rated Wood-Frame Wall Assembly

2x4 Wood Stud Wall – 100% Design Load – ASTM E 119/NFPA 251

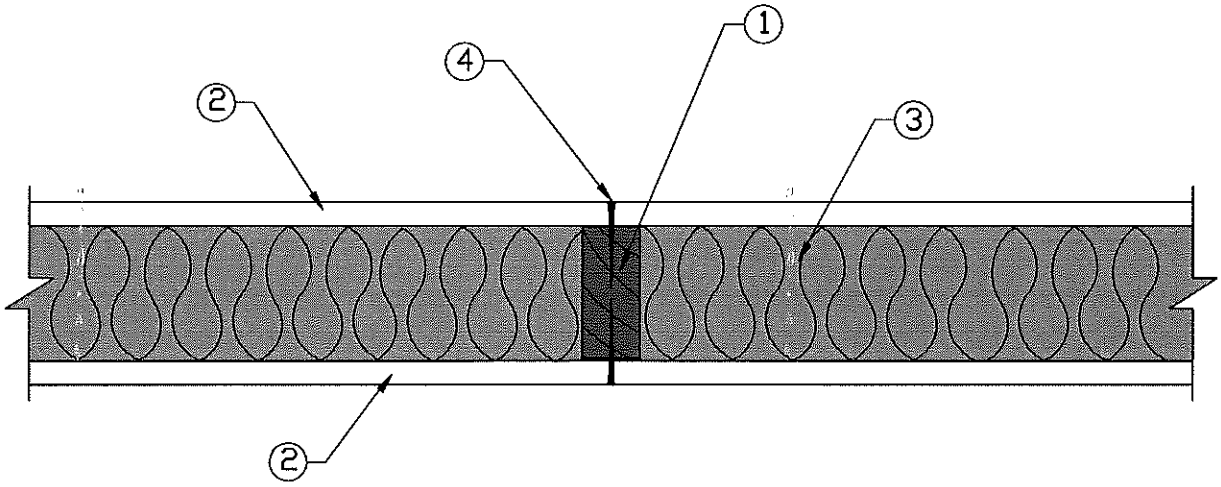

1. Framing - Nominal 2x4 wood studs, spaced 16 in. o.c., double top plates, single bottom plate
2. Sheathing - 5/8 in. Type X gypsum wallboard, 4 ft. wide, applied horizontally. Horizontal joints are unblocked. Horizontal application of wallboard represents the direction of least fire resistance as opposed to vertical application.
3. Insulation - 3-1/2-inch-thick mineral wool insulation (2.5 pcf, nominal)
4. Fasteners - 2-1/4 in. #6 Type S drywall screws, spaced 12 in. o.c.
5. Joints and Fastener Heads - Wallboard joints covered with paper tape and joint compound, fastener heads covered with joint compound

Tests conducted at the Fire Test Laboratory of National Gypsum Research Center

Test No:	WP-1248 (Fire Endurance)	March 29, 2000
	WP-1246 (Hose Stream)	March 09, 2000

Third Party Witness: Intertek Testing Services
Report J20-06170.1

This assembly was tested at 100% design load, calculated in accordance with the 2005 *National Design Specification® for Wood Construction*. The authority having jurisdiction should be consulted to assure acceptance of this report.

WS4-1.2 One-Hour Fire-Resistance-Rated Wood-Frame Wall Assembly (Rated from gypsum wallboard side)

2x4 Wood Stud Wall – 100% Design Load – ASTM E 119/NFPA 251

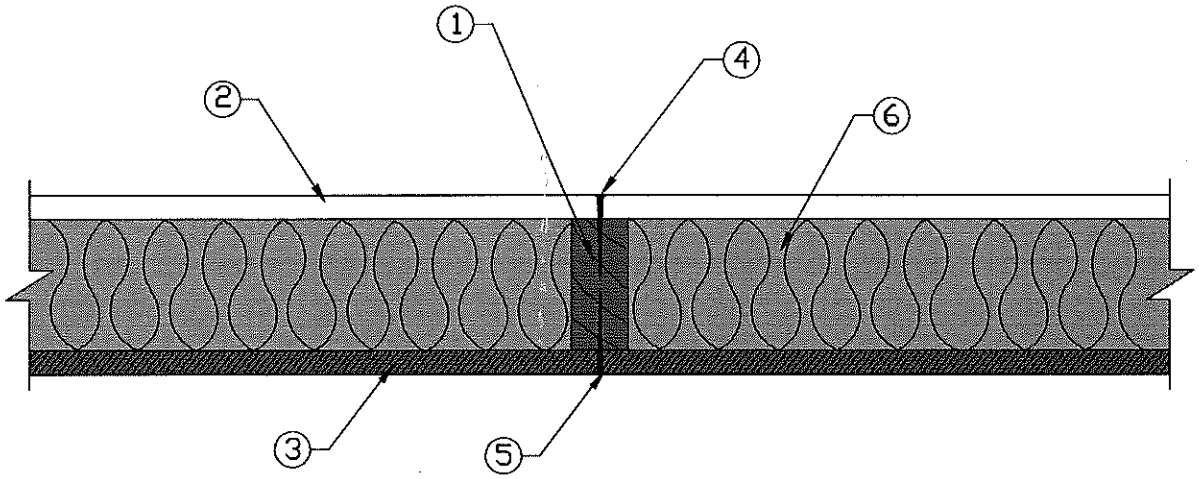

1 Framing - Nominal 2x4 wood studs, spaced 16 in. o.c., double top plates, single bottom plate

2. Interior Sheathing - 5/8 in. Type X gypsum wallboard, 4 ft. wide, applied horizontally. Horizontal joints are unblocked. Horizontal application of wallboard represents the direction of least fire resistance as opposed to vertical application.

3. Exterior Sheathing – Minimum 3/8 in. wood structural panels (oriented strand board), applied vertically, horizontal joints blocked

4. Gypsum Fasteners - 2-1/4 in. #6 Type S drywall screws, spaced 12 in. o.c.

5. Panel Fasteners - 6d common nails (bright) - 12 in. o.c. in the field, 6 in. o.c. panel edges

6. Insulation - 3-1/2-inch-thick mineral wool insulation (2.5 pcf, nominal)

7. Joints and Fastener Heads - Wallboard joints covered with paper tape and joint compound, fastener heads covered with joint compound

Tests conducted at the Fire Test Laboratory of National Gypsum Research Center
Test No: WP-1261 (Fire Endurance & Hose Stream) November 1, 2000

Third Party Witness: Intertek Testing Services
Report J20-006170.2

This assembly was tested at 100% design load, calculated in accordance with the 2005 *National Design Specification® for Wood Construction*. The authority having jurisdiction should be consulted to assure acceptance of this report.

WS4-1.3 One-Hour Fire-Resistance-Rated Wood-Frame Wall Assembly (Rated from gypsum wallboard side)

2x4 Wood Stud Wall – 78% Design Load – ASTM E 119/NFPA 251

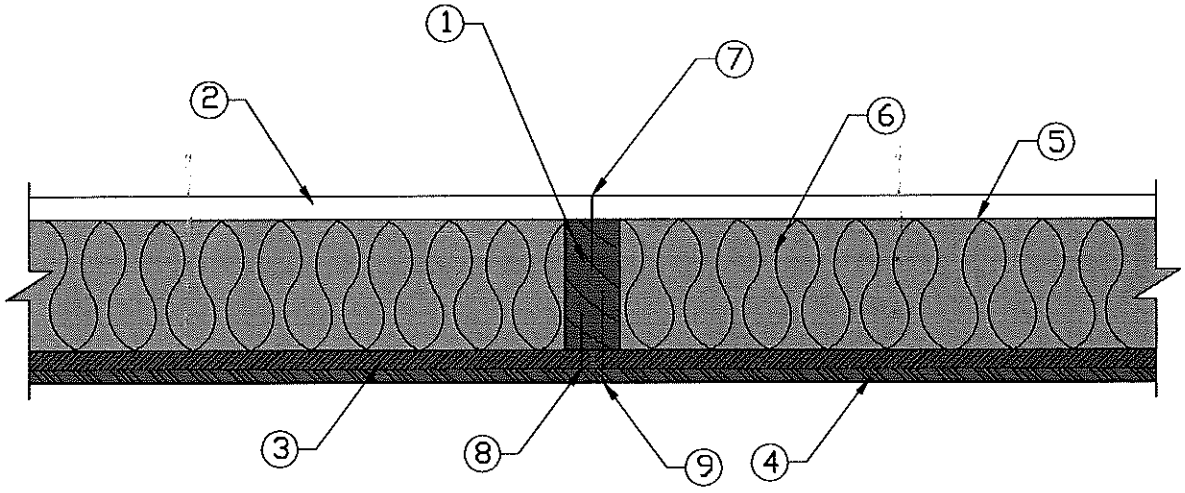

1. Framing - Nominal 2x4 wood studs, spaced 16 in. o.c., double top plates, single bottom plate
2. Interior Sheathing - 5/8 in. Type X gypsum wallboard, 4 ft. wide, applied vertically, unblocked
3. Exterior Sheathing – Minimum 1/2 in. fiberboard sheathing. *Alternate construction - minimum 1/2 in. lumber siding or 1/2 in. wood based sheathing.*
4. Exterior Siding - 3/8 in. hardboard shiplap edge panel siding. *Alternate construction - lumber, wood based, vinyl, or aluminum siding.*
5. Vapor Barrier - 4-mil polyethylene sheeting
6. Insulation - 3-1/2-inch-thick mineral wool insulation (2.5 pcf, nominal)
7. Gypsum Fasteners - 6d cement coated box nails spaced 7 in. o.c.
8. Fiberboard Fasteners - 1-1/2 in. galvanized roofing nails - 6 in. o.c. in the field, 3 in. o.c. panel edges
9. Hardboard Fasteners - 8d galvanized nails - 8 in. o.c. in the field, 4 in. o.c. panel edges
10. Joints and Fastener Heads - Wallboard joints covered with paper tape and joint compound, fastener heads covered with joint compound

Tests conducted at the Gold Bond Building Products Fire Testing Laboratory
Test No: WP-584 (Fire Endurance & Hose Stream) March 19, 1981

Third Party Witness: Warnock Hersey International, Inc.
Report WHI-690-003

This assembly was tested at 78% design load using an l_e/d of 33, calculated in accordance with the 2005 *National Design Specification® for Wood Construction.* The authority having jurisdiction should be consulted to assure acceptance of this report.

WS6-1.1 One-Hour Fire-Resistance-Rated Wood-Frame Wall Assembly

2x6 Wood Stud Wall – 100% Design Load – ASTM E 119/NFPA 251

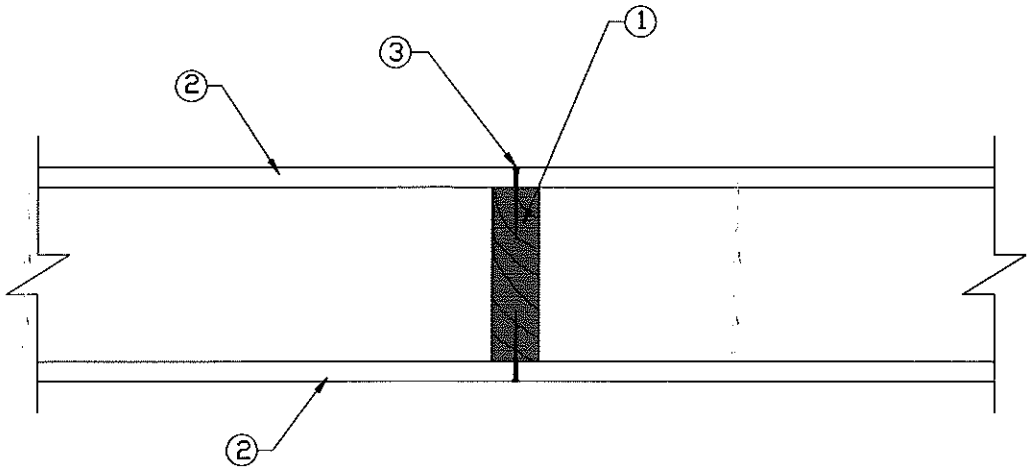

1. Framing - Nominal 2x6 wood studs, spaced 16 in. o.c., double top plates, single bottom plate
2. Sheathing - 5/8 in. Type X gypsum wallboard, 4 ft. wide, applied horizontally. Horizontal joints are unblocked. Horizontal application of wallboard represents the direction of least fire resistance as opposed to vertical application.
3. Fasteners - 2-1/4 in. #6 Type S drywall screws, spaced 7 in. o.c.
4. Joints and Fastener Heads - Wallboard joints covered with paper tape and joint compound, fastener heads covered with joint compound

Tests conducted at the Fire Test Laboratory of National Gypsum Research Center
Test No: WP-1232 (Fire Endurance) September 16, 1999
WP-1234 (Hose Stream) September 27, 1999

Third Party Witness: Intertek Testing Services
Report J99-22441.2

This assembly was tested at 100% design load, calculated in accordance with the 2005 *National Design Specification® for Wood Construction*. The authority having jurisdiction should be consulted to assure acceptance of this report.

WS6-1.2 One-Hour Fire-Resistance-Rated Wood-Frame Wall Assembly

2x6 Wood Stud Wall – 100% Design Load – ASTM E 119/NFPA 251

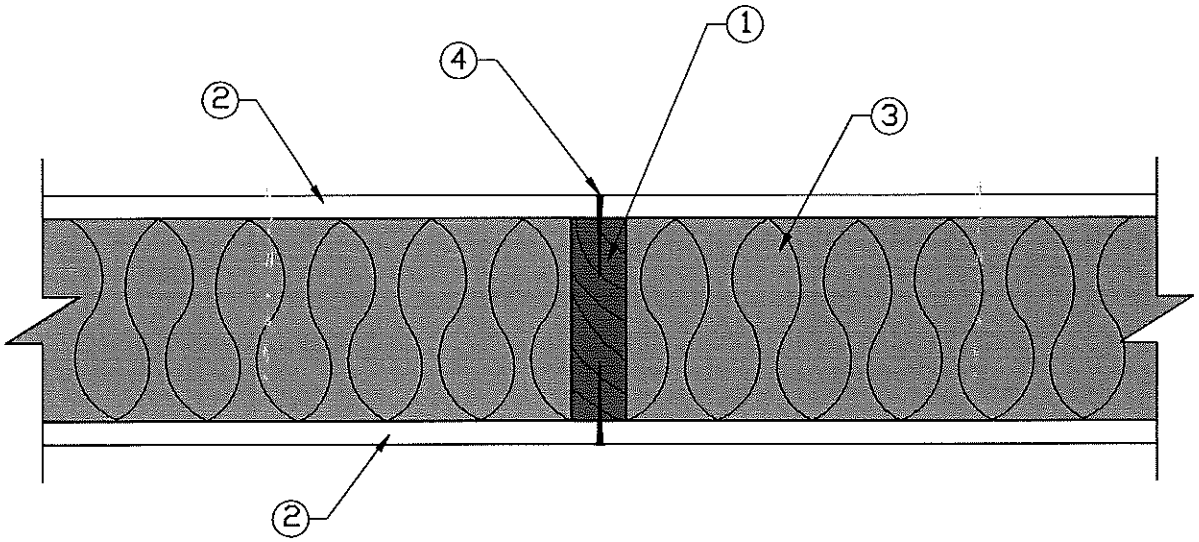

1. Framing - Nominal 2x6 wood studs, spaced 16 in. o.c., double top plates, single bottom plate
2. Sheathing - 5/8 in. Type X gypsum wallboard, 4 ft. wide, applied horizontally. Horizontal joints are unblocked. Horizontal application of wallboard represents the direction of least fire resistance as opposed to vertical application.
3. Insulation - 5-1/2-inch-thick mineral wool insulation (2.5 pcf, nominal)
4. Fasteners - 2-1/4 in. #6 Type S drywall screws, spaced 12 in. o.c.
5. Joints and Fastener Heads - Wallboard joints covered with paper tape and joint compound, fastener heads covered with joint compound

Tests conducted at the Fire Test Laboratory of National Gypsum Research Center
Test No: WP-1231 (Fire Endurance) September 14, 1999
WP-1230 (Hose Stream) August 30, 1999

Third Party Witness: Intertek Testing Services
Report J99-22441.1

This assembly was tested at 100% design load, calculated in accordance with the 2005 *National Design Specification® for Wood Construction*. The authority having jurisdiction should be consulted to assure acceptance of this report.

WS6-1.3 One-Hour Fire-Resistance-Rated Wood-Frame Wall Assembly (Rated from gypsum wallboard side)

2x6 Wood Stud Wall – 100% Design Load – ASTM E 119/NFPA 251

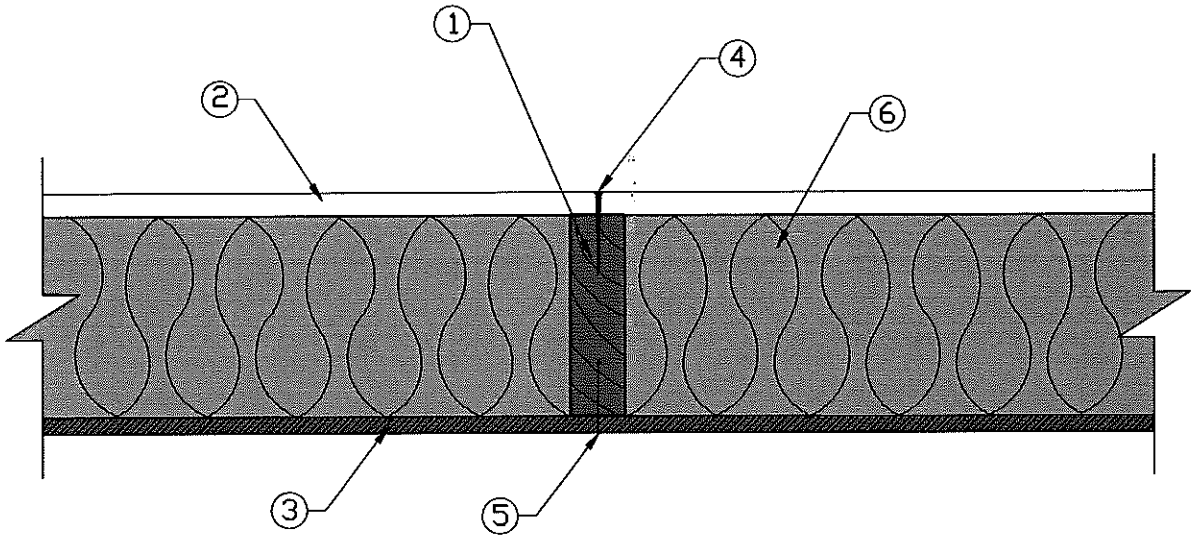

1. Framing - Nominal 2x6 wood studs, spaced 16 in. o.c., double top plates, single bottom plate
2. Interior Sheathing - 5/8 in. Type X gypsum wallboard, 4 ft. wide, applied horizontally. Horizontal joints are unblocked. Horizontal application of wallboard represents the direction of least fire resistance as opposed to vertical application.
3. Exterior Sheathing - Minimum 7/16 in. wood structural panels (oriented strand board), applied vertically, horizontal joints blocked
4. Gypsum Fasteners - 2-1/4 in. #6 Type S drywall screws, spaced 12 in. o.c.
5. Panel Fasteners - 6d common nails (bright) - 12 in. o.c. in the field, 6 in. o.c. panel edges
6. Insulation - 5-1/2-inch-thick mineral wool insulation (2.5 pcf, nominal)
7. Joints and Fastener Heads - Wallboard joints covered with paper tape and joint compound, fastener heads covered with joint compound

Tests conducted at the Fire Test Laboratory of National Gypsum Research Center
Test No: WP-1244 (Fire Endurance & Hose Stream) February 25, 2000

Third Party Witness: Intertek Testing Services
Report J99-27259.2

This assembly was tested at 100% design load, calculated in accordance with the 2005 *National Design Specification® for Wood Construction*. The authority having jurisdiction should be consulted to assure acceptance of this report.

WS6-1.4 One-Hour Fire-Resistance-Rated Wood-Frame Wall Assembly

2x6 Wood Stud Wall – 100% Design Load – ASTM E 119/NFPA 251

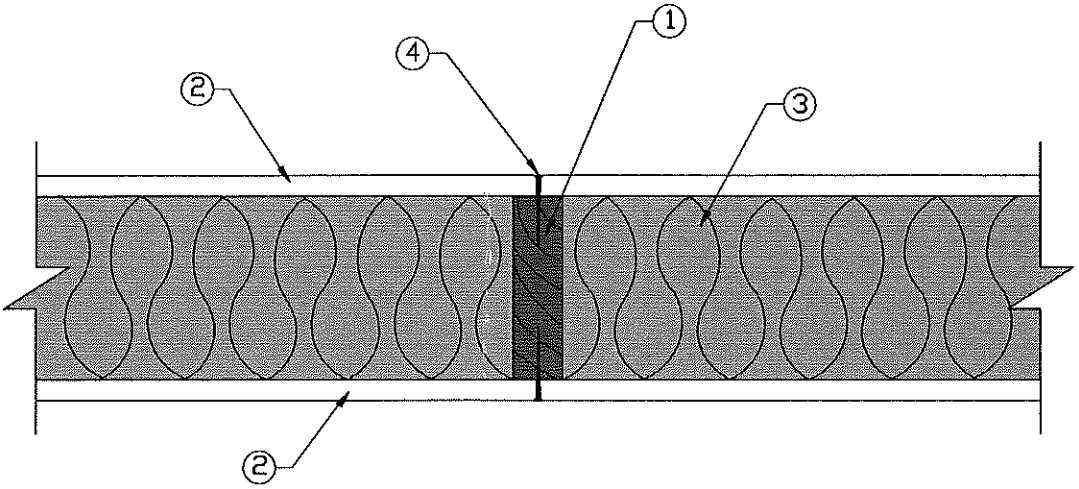

1. Framing - Nominal 2x6 wood studs, spaced 16 in. o.c., double top plates, single bottom plate
2. Sheathing - 5/8 in. Type X gypsum wallboard, 4 ft. wide, applied vertically. All panel edges backed by framing or blocking.
3. Insulation - R-19 fiberglass insulation
4. Fasteners - 2-1/4 in. #6 Type S drywall screws, spaced 12 in. o.c.
5. Joints and Fastener Heads - Wallboard joints covered with paper tape and joint compound, fastener heads covered with joint compound

Tests conducted at NGC Testing Services

Test No:	WP-1346 (Fire Endurance)	August 22, 2003
	WP-1351 (Hose Stream)	September 17, 2003

Third Party Witness: NGC Testing Services

This assembly was tested at 100% design load, calculated in accordance with the 2005 *National Design Specification® for Wood Construction*. The authority having jurisdiction should be consulted to assure acceptance of this report.

WS6-1.5 One-Hour Fire-Resistance-Rated Wood-Frame Wall Assembly (Rated from gypsum wallboard side)

2x6 Wood Stud Wall – 100% Design Load – ASTM E 119/NFPA 251

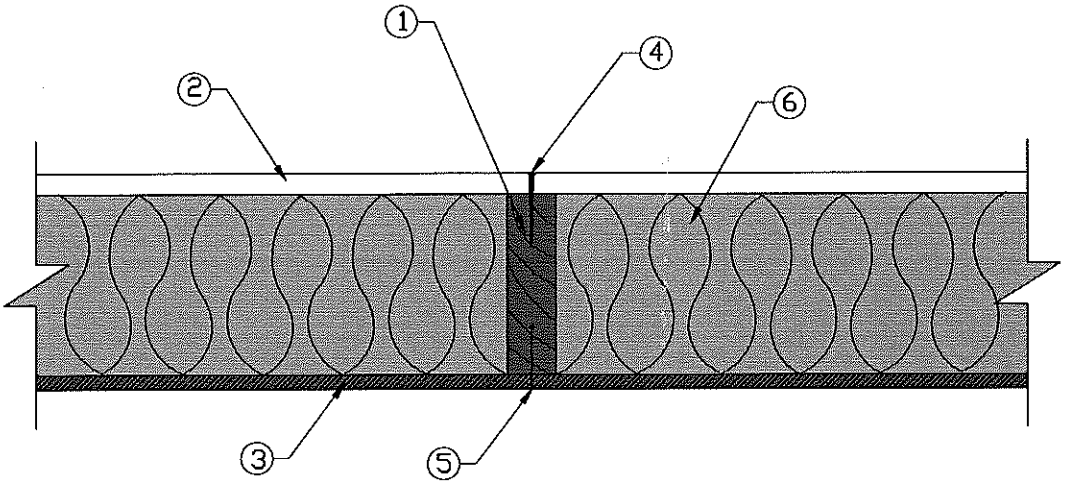

1. Framing - Nominal 2x6 wood studs, spaced 16 in. o.c., double top plates, single bottom plate
2. Interior Sheathing - 5/8 in. Type X gypsum wallboard, 4 ft. wide, applied vertically. All panel edges backed by framing or blocking.
3. Exterior Sheathing – Minimum 3/8 in. wood structural panels (oriented strand board), applied vertically, horizontal joints blocked
4. Gypsum Fasteners - 2-1/4 in. #6 Type S drywall screws, spaced 7 in. o.c.
5. Panel Fasteners - 6d common nails (bright) - 12 in. o.c. in the field, 6 in. o.c. panel edges
6. Insulation - R-19 fiberglass insulation
7. Joints and Fastener Heads - Wallboard joints covered with paper tape and joint compound, fastener heads covered with joint compound

Tests conducted at the NGC Testing Services
Test No: WP-1408 (Fire Endurance & Hose Stream) August 13, 2004

Third Party Witness: NGC Testing Services

This assembly was tested at 100% design load, calculated in accordance with the 2005 *National Design Specification® for Wood Construction*. The authority having jurisdiction should be consulted to assure acceptance of this report.

WS6-2.1 Two-Hour Fire-Resistance-Rated Wood-Frame Wall Assembly

2x6 Wood Stud Wall – 100% Design Load – ASTM E 119/NFPA 251

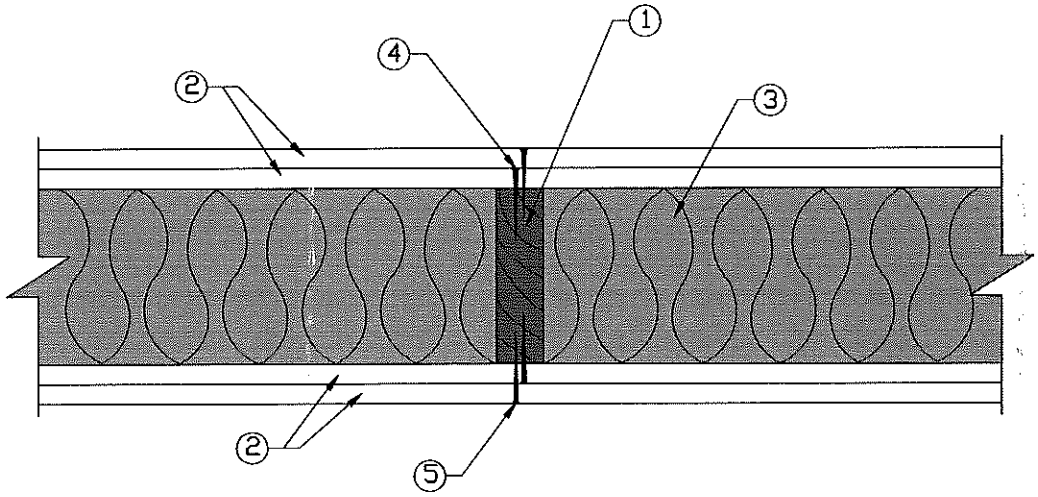

1. Framing - Nominal 2x6 wood studs, spaced 24 in. o.c., double top plates, single bottom plate.
2. Sheathing:

   Base Layer - 5/8 in. Type X gypsum wallboard, 4 ft. wide, applied horizontally, joints staggered on opposite sides of the wall.

   Face Layer - 5/8 in. Type X gypsum wallboard, 4 ft. wide, applied horizontally, joints staggered with base layer.

   Horizontal joints are unblocked. Horizontal application of wallboard represents the direction of least fire resistance as opposed to vertical application.
3. Insulation - 5-1/2-inch-thick mineral wool insulation (2.5 pcf, nominal)
4. Gypsum Fasteners: Base Layer - 2-1/4 in. #6 Type S drywall screws, spaced 24 in. o.c.
5. Gypsum Fasteners: Face Layer - 2-1/4 in. #6 Type S drywall screws, spaced 8 in. o.c.
6. Joints and Fastener Heads - Wallboard joints covered with paper tape and joint compound, fastener heads covered with joint compound

Tests conducted at the Fire Test Laboratory of National Gypsum Research Center
Test No: WP-1262 (Fire Endurance) November 3, 2000
WP-1268 (Hose Stream) December 8, 2000

Third Party Witness: Intertek Testing Services
Report J20-006170.3

This assembly was tested at 100% design load, calculated in accordance with the 2005 *National Design Specification® for Wood Construction*. The authority having jurisdiction should be consulted to assure acceptance of this report.

WIJ-1.1 One-Hour Fire-Resistance-Rated Ceiling Assembly

Floor[a]/Ceiling - 100% Design Load - 1 Hour Rating - ASTM E 119 / NFPA 251

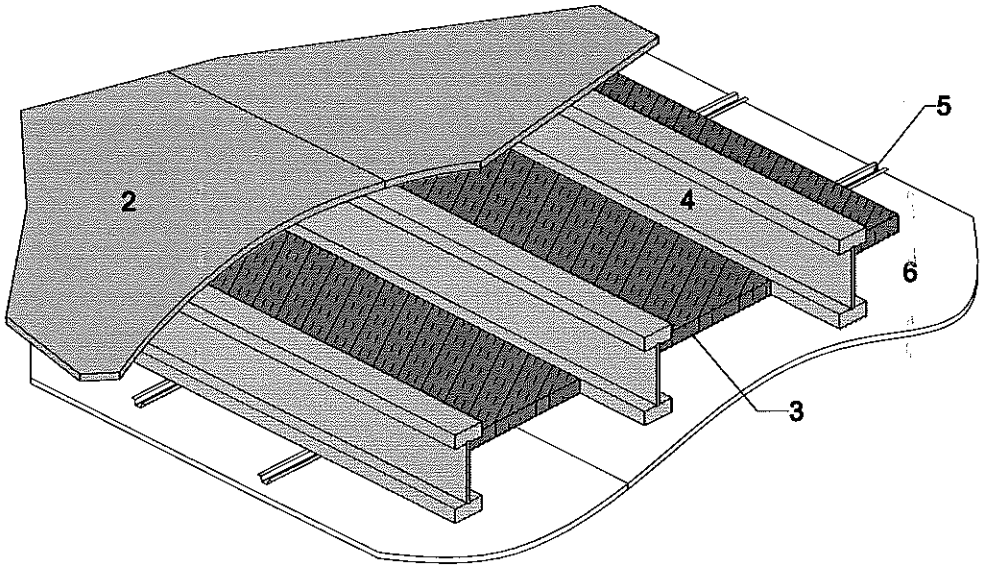

1. **Floor Topping (optional, not shown):** Gypsum concrete, lightweight or normal concrete topping.
2. **Floor Sheathing:** Minimum 23/32-inch-thick tongue-and-groove wood sheathing (Exposure 1). Installed per code requirements with minimum 8d common nails and glued to joist top flanges with AFG-01 construction adhesive.
3. **Insulation:** Minimum 1-1/2-inch-thick mineral wool insulation batts – 2.5 pcf (nominal), supported by furring channels.
4. **Structural Members:** Wood I-joists spaced a maximum of 24 inches on center.

   Minimum I-joist flange depth: 1-1/2 inches — Minimum I-joist flange area: 5.25 inches^2
   Minimum I-joist web thickness: 3/8 inch — Minimum I-joist depth: 9-1/4 inches

   See ASTM D 5055-07 for qualification requirements.
5. **Furring Channels:** Minimum 0.026-inch-thick galvanized steel hat-shaped furring channels, attached perpendicular to I-joists using 1-5/8-inch-long drywall screws. Furring channels spaced 16 inches on center and doubled at each wallboard end joint extending to the next joist.
6. **Gypsum Wallboard:** Minimum 5/8-inch-thick Type C gypsum wallboard installed with long dimension perpendicular to furring channels and fastened to each channel with minimum 1-1/8-inch-long Type S drywall screws. Fasteners spaced 12 inches on center in the field of the wallboard, 8 inches on center at wallboard end joints, and 3/4 inches from panel edges and ends. End joints of wallboard staggered.
7. **Finish System (not shown):** Face layer joints covered with tape and coated with joint compound. Screw heads covered with joint compound.

Fire Test conducted at Gold Bond Building Products Research Center — February 9, 1990
Third Party Witness: Warnock Hersey International, Inc. — Report No: WHI-651-0311.1

STC and IIC Sound Ratings for Listed Assembly							
Without Gypsum Concrete				With Gypsum Concrete			
Cushioned Vinyl		Carpet & Pad		Cushioned Vinyl		Carpet & Pad	
STC	IIC	STC	IIC	STC	IIC	STC	IIC
-	-	-	-	-	-	49[b]	59[b]

[a] This assembly may also be used in a fire-rated roof/ceiling application, but only when constructed exactly as described.

[b] STC and IIC values estimated by David L. Adams Associates, Inc

WIJ-1.2 One-Hour Fire-Resistance-Rated Ceiling Assembly

Floor[a]/Ceiling - 100% Design Load - 1 Hour Rating - ASTM E 119 / NFPA 251

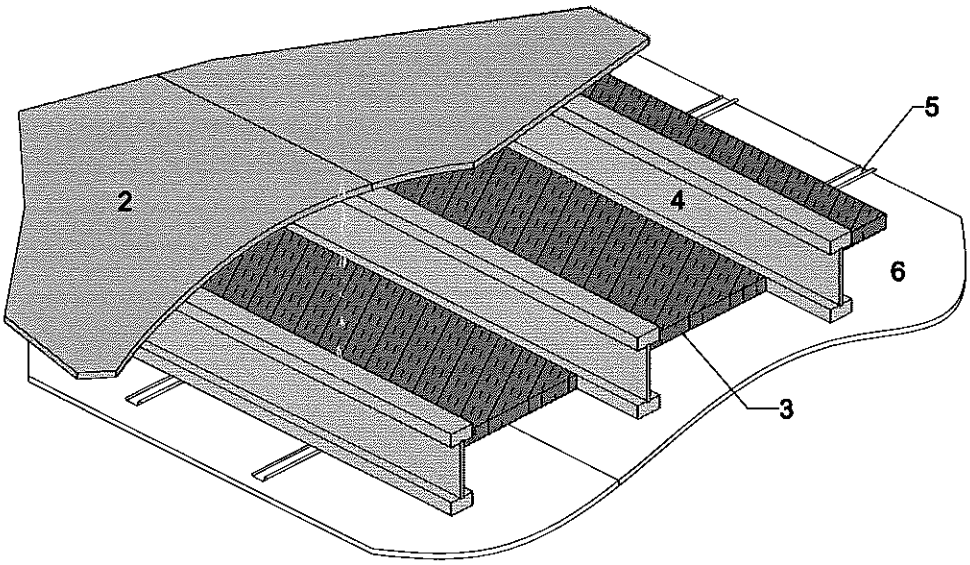

1. **Floor Topping (optional, not shown):** Gypsum concrete, lightweight or normal concrete topping.
2. **Floor Sheathing:** Minimum 23/32-inch-thick tongue-and-groove wood sheathing (Exposure 1). Installed per code requirements with minimum 8d common nails and glued to joist top flanges with AFG-01 construction adhesive.
3. **Insulation:** Minimum 1-1/2-inch-thick mineral wool insulation batts – 2.5 pcf (nominal), supported by resilient channels.
4. **Structural Members:** Wood I-joists spaced a maximum of 24 inches on center.
   Minimum I-joist flange depth: 1-1/2 inches
   Minimum I-joist flange area: 5.25 inches^2
   Minimum I-joist web thickness: 7/16 inch
   Minimum I-joist depth: 9-1/4 inches

   See ASTM D 5055-07 for qualification requirements.
5. **Resilient Channels:** Minimum 0.019-inch-thick galvanized steel resilient channels, attached perpendicular to I-joists using 1-5/8-inch-long drywall screws. Resilient channels spaced 16 inches on center and doubled at each wallboard end joint extending to the next joist.
6. **Gypsum Wallboard:** Minimum 5/8-inch-thick Type C gypsum wallboard installed with long dimension perpendicular to resilient channels and fastened to each channel with minimum 1-inch-long Type S drywall screws. Fasteners spaced 12 inches on center in the field of the wallboard, 8 inches on center at wallboard end joints, and 3/4 inches from panel edges and ends. End joints of wallboard staggered.
7. **Finish System (not shown):** Face layer joints covered with tape and coated with joint compound. Screw heads covered with joint compound.

Fire Test conducted at Gold Bond Building Products Research Center — June 19, 1984
Third Party Witness: Warnock Hersey International, Inc. — Report No: WHI-694-0159

STC and IIC Sound Ratings for Listed Assembly							
Without Gypsum Concrete				With Gypsum Concrete			
Cushioned Vinyl		Carpet & Pad		Cushioned Vinyl		Carpet & Pad	
STC	IIC	STC	IIC	STC	IIC	STC	IIC
51[b]	46[b]	51[b]	64[b]	60[b]	50[b]	60[b]	65[b]

[a] This assembly may also be used in a fire-rated roof/ceiling application, but only when constructed exactly as described.

[b] STC and IIC values estimated by David L. Adams Associates, Inc

WIJ-1.3 One-Hour Fire-Resistance-Rated Ceiling Assembly

Floor[a]/Ceiling - 100% Design Load - 1 Hour Rating - ASTM E 119 / NFPA 251

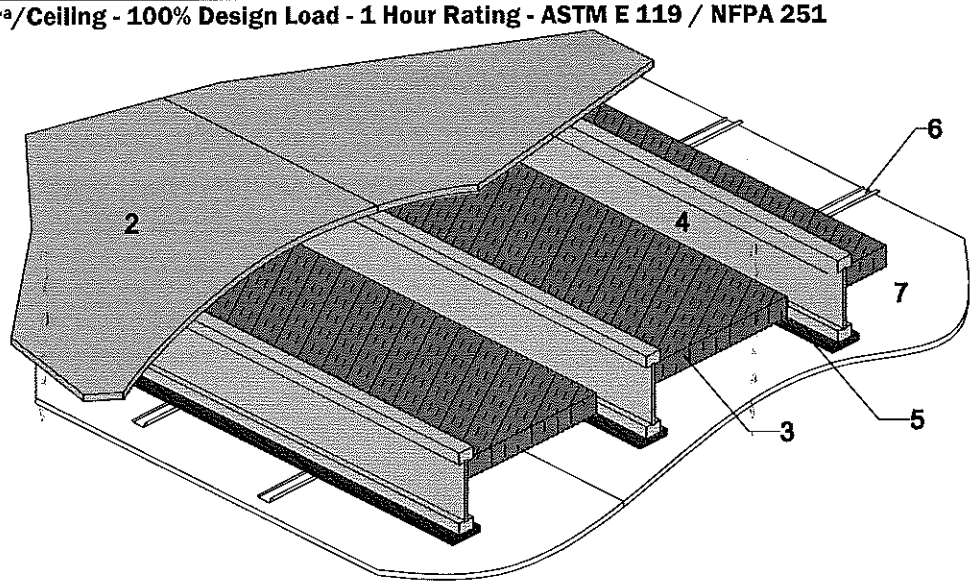

1. **Floor Topping (optional, not shown):** Gypsum concrete, lightweight or normal concrete topping.
2. **Floor Sheathing:** Minimum 23/32-inch-thick tongue-and-groove wood sheathing (Exposure 1). Installed per code requirements.
3. **Insulation:** Minimum 2-inch-thick mineral wool insulation batts – 3.5 pcf (nominal), supported by setting strip edges, friction-fitted between the sides of the I-joist flanges.
4. **Structural Members:** Wood I-joists spaced a maximum of 24 inches on center.
   Minimum I-joist flange depth: 1-5/16 inches
   Minimum I-joist web thickness: 3/8 inch
   Minimum I-joist flange area: 2.25 inches^2
   Minimum I-joist depth: 9-1/4 inches

   See ASTM D 5055-07 for qualification requirements.
5. **Setting Strips:** Minimum 1x4 (nominal) wood setting strips attached with 1-1/2-inch-long drywall screws at 24 inches on center along the bottom flange of I-joist creating a ledge to support insulation.
6. **Resilient Channels:** Minimum 0.019-inch-thick galvanized steel resilient channels, attached perpendicular to I-joists using 1-7/8-inch-long drywall screws. Resilient channels spaced 16 inches on center and doubled at each wallboard end joint extending to the next joist.
7. **Gypsum Wallboard:** Minimum 5/8-inch-thick Type C gypsum wallboard installed with long dimension perpendicular to resilient channels and fastened to each channel with minimum 1-1/8-inch-long Type S drywall screws. Fasteners spaced 7 inches on center and 3/4 inches from panel edges and ends. End joints of wallboard staggered.
7. **Finish System (not shown):** Face layer joints covered with tape and coated with joint compound. Screw heads covered with joint compound.

Fire Test conducted at National Gypsum Testing Services, Inc. September 28, 2001
Third Party Witness: Underwriter's Laboratories, Inc. Report No: NC3369

STC and IIC Sound Ratings for Listed Assembly							
Without Gypsum Concrete				With Gypsum Concrete			
Cushioned Vinyl		Carpet & Pad		Cushioned Vinyl		Carpet & Pad	
STC	IIC	STC	IIC	STC	IIC	STC	IIC
51[b]	46[b]	52	66	60[b]	48[b]	60[b]	60[b]

[a] This assembly may also be used in a fire-rated roof/ceiling application, but only when constructed exactly as described.

[b] STC and IIC values estimated by David L. Adams Associates, In

WIJ-1.4 One-Hour Fire-Resistance-Rated Ceiling Assembly

Floor[a]/Ceiling - 100% Design Load - 1 Hour Rating - ASTM E 119 / NFPA 251

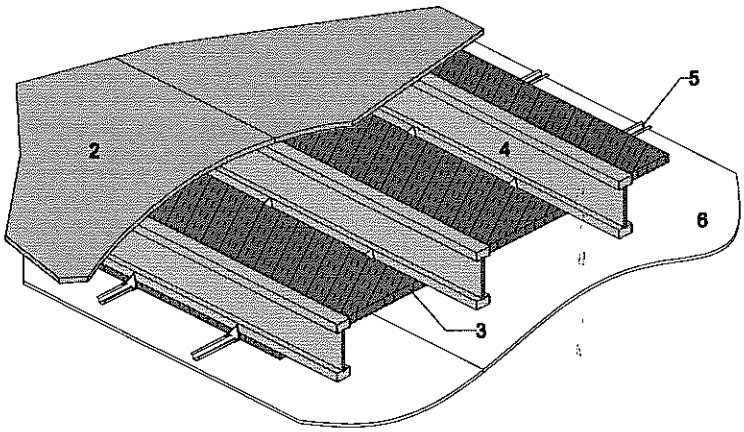

1. **Floor Topping (optional, not shown):** Gypsum concrete, lightweight or normal concrete topping.
2. **Floor Sheathing:** Minimum 23/32-inch-thick tongue-and-groove wood sheathing (Exposure 1). Installed per code requirements with minimum 8d common nails.
3. **Insulation:** Minimum 1-inch-thick mineral wool insulation batts – 6 pcf (nominal), with width equal to the on-center spacing of the I-joists. Batts installed on top of furring channels and under bottom flange of I-joists with the sides butted against support clips. Abutted ends of batts centered over furring channels with batts tightly butted at all joints.
4. **Structural Members:** Wood I-joists spaced a maximum of 24 inches on center.

   Minimum I-joist flange depth: 1-1/2 inches
   Minimum I-joist web thickness: 3/8 inch
   Minimum I-joist flange area: 3.45 inches^2
   Minimum I-joist depth: 9-1/4 inches

   See ASTM D 5055-07 for qualification requirements.
5. **Furring Channels:** Minimum 0.019-inch-thick galvanized steel hat-shaped furring channels, attached perpendicular to I-joists spaced 24 inches on center. At channel splices, adjacent pieces overlapped a minimum of 6 inches and tied with a double strand of No. 18 gage galvanized steel wire at each end of the overlap. Channels secured to I-joists with Simpson Type CSC support clips at each intersection with the I-joists. Clips nailed to the side of I-joist bottom flange with one 1-1/2-inch-long No. 11 gage nail. A row of furring channel located on each side of wallboard end joints and spaced 2.25 inches from the end joint (4.5 inches on center).
6. **Gypsum Wallboard:** Minimum ½-inch-thick Type C gypsum wallboard. Wallboard installed with long dimension perpendicular to furring channels and fastened to each channel with minimum 1-inch-long Type S drywall screws. Fasteners spaced 12 inches on center in the field of the wallboard, 6 inches on center at wallboard end joints, and 3/4 inches from panel edges and ends. End joints of wallboard staggered. For staggered wallboard end joints, furring channels extend a minimum of 6 inches beyond each end of the joint.
7. **Finish System (not shown):** Face layer joints covered with tape and coated with joint compound. Screw heads covered with joint compound.

Fire Test conducted at Underwriter's Laboratories, Inc. — May 11, 1983
Third Party Witness: Underwriter's Laboratories, Inc. — Report No: UL R10371-1

STC and IIC Sound Ratings for Listed Assembly							
Without Gypsum Concrete				With Gypsum Concrete			
Cushioned Vinyl		Carpet & Pad		Cushioned Vinyl		Carpet & Pad	
STC	IIC	STC	IIC	STC	IIC	STC	IIC
-	-	46	68	51	47	50	73

[a] This assembly may also be used in a fire-rated roof/ceiling application, but only when constructed exactly as described.

WIJ-1.5 One-Hour Fire-Resistance-Rated Ceiling Assembly

Floor[a]/Ceiling - 100% Design Load - 1 Hour Rating - ASTM E 119 / NFPA 251

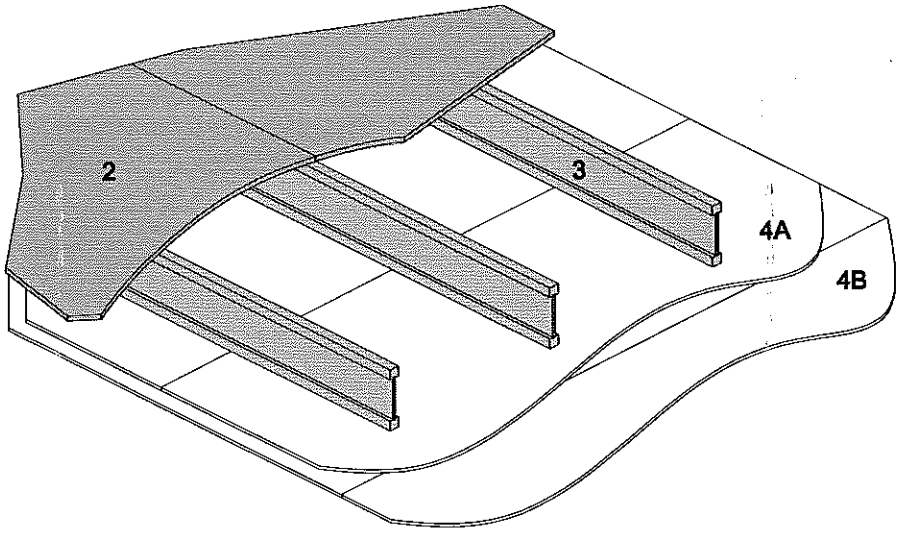

1. **Floor Topping (optional, not shown):** Gypsum concrete, lightweight or normal concrete topping.
2. **Floor Sheathing:** Minimum 23/32-inch-thick tongue-and-groove wood sheathing (Exposure 1). Installed per code requirements with minimum 8d common nails.
3. **Structural Members:** Wood I-joists spaced a maximum of 24 inches on center.

   Minimum I-joist flange depth: 1-1/2 inches
   Minimum I-joist web thickness: 3/8 inch
   Minimum I-joist flange area: 2.25 inches^2
   Minimum I-joist depth: 9-1/4 inches

   See ASTM D 5055-07 for qualification requirements.

4. **Gypsum Wallboard:** Two layers of minimum 1/2 inch Type C gypsum wallboard attached with the long dimension perpendicular to the I-joists as follows:

   4a. Wallboard Base Layer: Base layer of wallboard attached to bottom flange of I-joists using 1 inch Type S drywall screws at 12 inches on center. End joints of wallboard centered on bottom flange of the I-joist and staggered.

   4b. Wallboard Face Layer: Face layer of wallboard attached to bottom flange of I-joists through base layer using 1-5/8 inch Type S drywall screws spaced 12 inches on center on intermediate joists and 8 inches on center at end joints. Edge joints of wallboard face layer offset 24 inches from those of base layer. End joints centered on bottom flange of I-joists and offset a minimum of 48 inches from those of base layer. Additionally, wallboard face layer attached to base layer with 1-1/2 inch Type G drywall screws spaced 8 inches on center with a 4" stagger, placed 6 inches from face layer end joints.

5. **Finish System (not shown):** Face layer joints covered with tape and coated with joint compound. Screw heads covered with joint compound.

Fire Test conducted at NGC Testing Services, Inc Report No. FC-687 January 25, 2007

STC and IIC Sound Ratings for Listed Assembly							
Without Gypsum Concrete				With Gypsum Concrete			
Cushioned Vinyl		Carpet & Pad		Cushioned Vinyl		Carpet & Pad	
STC	IIC	STC	IIC	STC	IIC	STC	IIC
-	-	-	-	-	-	49[b]	55[b]

[a] This assembly may also be used in a fire-rated roof/ceiling application, but only when constructed exactly as described.

[b] STC and IIC values estimated by David L. Adams Associates, Inc.

WIJ-1.6 One-Hour Fire-Resistance-Rated Ceiling Assembly

Floor[a]/Ceiling - 100% Design Load - 1 Hour Rating - ASTM E 119 / NFPA 251

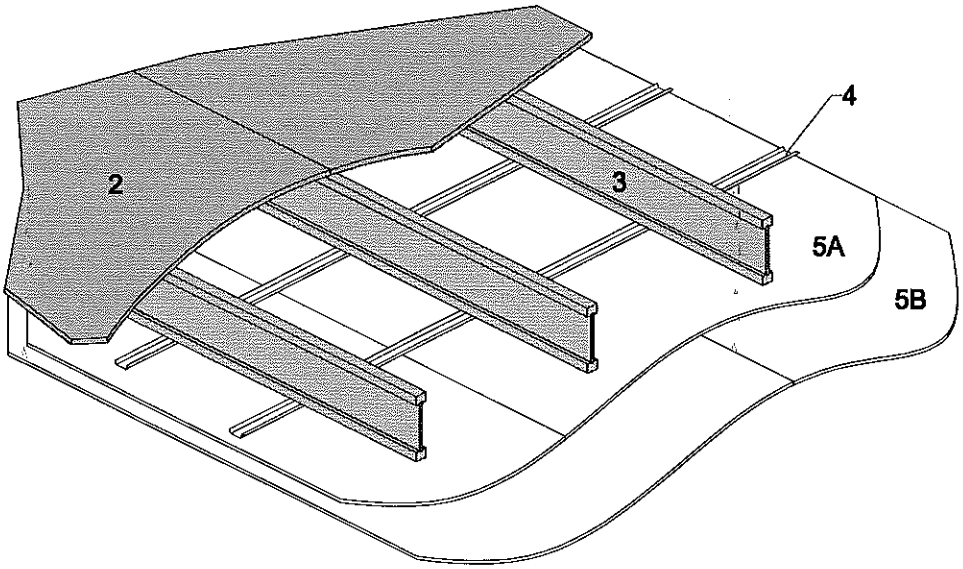

1. **Floor Topping (optional, not shown):** Gypsum concrete, lightweight or normal concrete topping.
2. **Floor Sheathing:** Minimum 23/32-inch-thick tongue-and-groove wood sheathing (Exposure 1). Installed per code requirements with minimum 8d common nails.
3. **Structural Members:** Wood I-joists spaced a maximum of 24 inches on center.

   Minimum I-joist flange depth: 1-5/16 inches — Minimum I-joist flange area: 2.25 inches^2
   Minimum I-joist web thickness: 3/8 inch — Minimum I-joist depth: 9-1/2 inches
   See ASTM D 5055-07 for qualification requirements.
4. **Resilient Channels[b]:** Minimum 0.019-inch-thick galvanized steel resilient channel attached perpendicular to the bottom flange of the I-joists with one 1-1/4 inch drywall screw. Channels spaced a maximum of 16 inches on center [24 inches on center when I-joists are spaced a maximum of 16 inches on center].
5. **Gypsum Wallboard:** Two layers of minimum 1/2 inch Type X gypsum wallboard attached with the long dimension perpendicular to the resilient channels as follows:

   5a. Wallboard Base Layer: Base layer of wallboard attached to resilient channels using 1-1/4 inch Type S drywall screws at 12 inches on center.

   5b. Wallboard Face Layer: Face layer of wallboard attached to resilient channels through base layer using 1-5/8 inch Type S drywall screws spaced 12 inches on center. Edge joints of wallboard face layer offset 24 inches from those of base layer. Additionally, wallboard face layer attached to base layer with 1-1/2 inch Type G drywall screws spaced 8 inches on center, placed 1-1/2 inches from face layer end joints.
6. **Finish System (not shown):** Face layer joints covered with tape and coated with joint compound. Screw heads covered with joint compound.

Fire Test conducted at National Research Council of Canada Report No. A-4440.1 June 24, 1997

STC and IIC Sound Ratings for Listed Assembly							
Without Gypsum Concrete				With Gypsum Concrete			
Cushioned Vinyl		Carpet & Pad		Cushioned Vinyl		Carpet & Pad	
STC	IIC	STC	IIC	STC	IIC	STC	IIC
-	-	54	68	-	-	58[c]	55[c]

[a] This assembly may also be used in a fire-rated roof/ceiling application, but only when constructed exactly as described.
[b] Direct attachment of gypsum wallboard in lieu of attachment to resilient channels is typically deemed acceptable. When gypsum wallboard is directly attached to the I-joists, the wallboard should be installed with long dimension perpendicular to the I-joists and sound ratings for WIJ-1.5 should be used.
[c] STC and IIC values estimated by David L. Adams Associates, Inc

WIJ-1.7 One-Hour Fire-Resistance-Rated Ceiling Assembly

Floor[a]/Ceiling - 100% Design Load - 1 Hour Rating - ASTM E 119 / NFPA 251

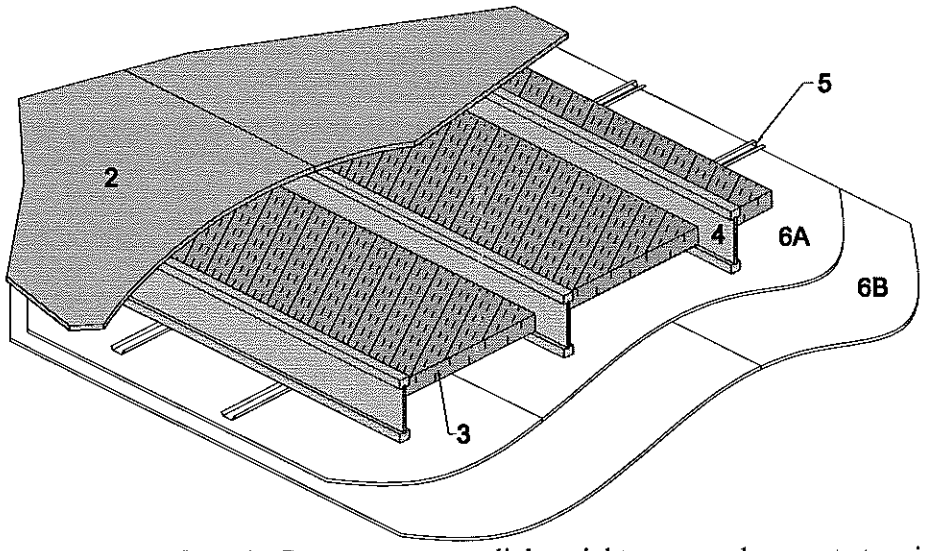

1. **Floor Topping (optional, not shown):** Gypsum concrete, lightweight or normal concrete topping.
2. **Floor Sheathing:** Minimum 23/32-inch-thick tongue-and-groove wood sheathing (Exposure 1). Installed per code requirements with minimum 8d common nails.
3. **Insulation:** Fiberglass insulation placed between I-joists supported by the resilient channels.
4. **Structural Members:** Wood I-joists spaced a maximum of 24 inches on center.

   Minimum I-joist flange depth: 1-1/2 inches
   Minimum I-joist web thickness: 3/8 inch
   Minimum I-joist flange area: 2.25 inches^2
   Minimum I-joist depth: 9-1/2 inches

   See ASTM D 5055-07 for qualification requirements.
5. **Resilient Channels:** Minimum 0.019-inch-thick galvanized steel resilient channel attached perpendicular to the bottom flange of the I-joists with one 1-1/4 inch drywall screw. Channels spaced a maximum of 16 inches on center [24 inches on center when I-joists are spaced a maximum of 16 inches on center].
6. **Gypsum Wallboard:** Two layers of minimum 1/2 inch Type X gypsum wallboard attached with the long dimension perpendicular to the resilient channels as follows:

   6a. Wallboard Base Layer: Base layer of wallboard attached to resilient channels using 1-1/4 inch Type S drywall screws at 12 inches on center.

   6b. Wallboard Face Layer: Face layer of wallboard attached to resilient channels through base layer using 1-5/8 inch Type S drywall screws spaced 12 inches on center. Edge joints of wallboard face layer offset 24 inches from those of base layer. Additionally, wallboard face layer attached to base layer with 1-1/2 inch Type G drywall screws spaced 8 inches on center, placed 1-1/2 inches from face layer end joints.
7. **Finish System (not shown):** Face layer joints covered with tape and coated with joint compound. Screw heads covered with joint compound.

Fire Test conducted at National Research Council of Canada Report No. A-4219.13.2 March 23, 1998

STC and IIC Sound Ratings for Listed Assembly							
Without Gypsum Concrete				With Gypsum Concrete			
Cushioned Vinyl		Carpet & Pad		Cushioned Vinyl		Carpet & Pad	
STC	IIC	STC	IIC	STC	IIC	STC	IIC
59	50	55[b]	68[b]	65	51	63[b]	65[b]

[a] This assembly may also be used in a fire-rated roof/ceiling application, but only when constructed exactly as described.
[b] STC and IIC values estimated by David L. Adams Associates, Inc

WIJ-2.1 Two-Hour Fire-Resistance-Rated Ceiling Assembly

Floor[a]/Ceiling - 100% Design Load - 2 Hour Rating - ASTM E 119 / NFPA 251

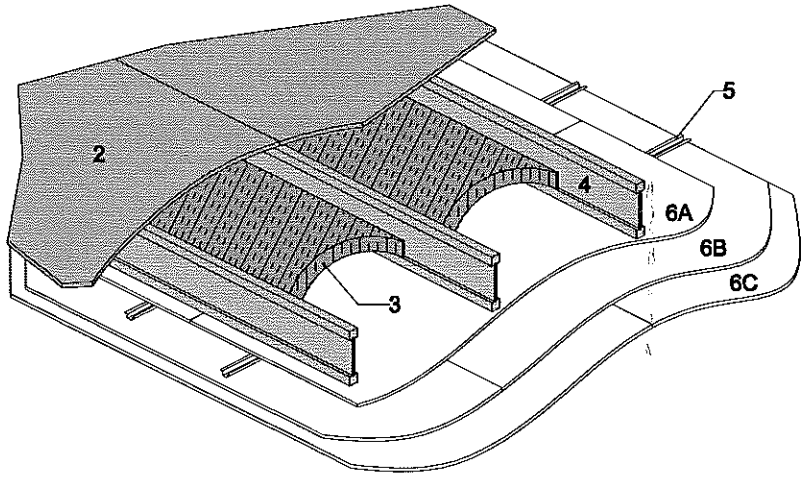

1. **Floor Topping (optional, not shown):** Gypsum concrete, lightweight or normal concrete topping.
2. **Floor Sheathing:** Minimum 23/32-inch-thick tongue-and-groove wood sheathing (Exposure 1). Installed per code requirements.
3. **Insulation:** Minimum 3-1/2-inch-thick unfaced fiberglass insulation fitted between I-joists supported by stay wires spaced 12 inches on center.
4. **Structural Members:** Wood I-joists spaced a maximum of 24 inches on center.
   Minimum I-joist flange depth: 1-1/2 inches — Minimum I-joist flange area: 2.25 inches^2
   Minimum I-joist web thickness: 3/8 inch — Minimum I-joist depth: 9-1/4 inches
   See ASTM D 5055-07 for qualification requirements.
5. **Furring Channels:** Minimum 0.0179-inch-thick galvanized steel hat-shaped furring channels, attached perpendicular to I-joists using 1-5/8 inch long drywall screws. Furring channels spaced 16 inches on center (furring channels used to support the second and third layers of gypsum wallboard).
6. **Gypsum Wallboard:** Three layers of minimum 5/8 inch Type C gypsum wallboard as follows:
   6a. Wallboard Base Layer: Base layer of wallboard attached to bottom flange of I-joists using 1-5/8 inch Type S drywall screws at 12 inches on center with the long dimension of wallboard perpendicular to I-joist. End joints of wallboard centered on bottom flange of the I-joist and staggered from end joints in adjacent sheets.
   6b. Wallboard Middle Layer: Middle layer of wallboard attached to furring channels using 1 inch Type S drywall screws spaced 12 inches on center with the long dimension of wallboard perpendicular to furring channels. End joints staggered from end joints in adjacent sheets.
   6c. Wallboard Face Layer: Face layer of wallboard attached to furring channels through middle layer using 1-5/8 inch Type S drywall screws spaced 8 inches on center. Edge joints of face layer of wallboard offset 24 inches from those of middle layer. End joints of face layer of wallboard staggered with respect to the middle layer.
7. **Finish System (not shown):** Face layer joints covered with tape and coated with joint compound. Screw heads covered with joint compound.

Fire Test conducted at Gold Bond Building Products Research Center — December 16, 1992
Third Party Witness: PFS Corporation — Report No: #92-56

STC and IIC Sound Ratings for Listed Assembly

Without Gypsum Concrete				With Gypsum Concrete			
Cushioned Vinyl		Carpet & Pad		Cushioned Vinyl		Carpet & Pad	
STC	IIC	STC	IIC	STC	IIC	STC	IIC
-	-	49[b]	54[b]	58	45	58	64

[a] This assembly may also be used in a fire-rated roof/ceiling application, but only when constructed exactly as described.

[b] STC and IIC values estimated by David L. Adams Associates, Inc

Code Enforcement Officer

From: Daniel Vincent <bildah@comcast.net>
Sent: Monday, February 25, 2019 12:18 AM
To: Code Enforcement Officer
Subject: The 2009 IECC: Increased Inspections and Testing Lead to Increased Energy Savings | IAEI News magazine

https://iaeimagazine.org/magazine/2010/05/16/the-2009-iecc-increased-inspections-and-testing-lead-to-increased-energy-savings/

The 2009 IECC: Increased Inspections and Testing Lead to Increased Energy Savings

May 16, 2010

What's happening with energy efficiency in existing and new residential homes?

The U.S. Department of Energy (DOE) is committed to improving the most popular model residential energy code by 30% by 2012 and moving to net zero energy homes by 2020. The first major step toward those goals is embodied in the 2009 International Energy Conservation Code® (IECC), which by various estimates is 12% to 15% more energy efficient than its 2006 predecessor. Key new provisions in the 2009 IECC include:

- Mandatory pressure testing of ducts
- Mandatory pressure testing of envelope leakage or visual inspection based on a defined checklist
- Requirement that 50% of all lamps be high efficacy

These changes not only move toward DOE's goals for improving the code, but are beginning to make their way into state and local building codes, where they will become part of the new standard practices for improving energy efficiency in the residential building industry. In so doing, they will create the need for some new/enhanced inspections and require a new level of testing expertise.

Photo 1

Duct Testing

Prior versions of the IECC have required that ducts not installed within the thermal building envelope[1]be insulated and sealed, but not until the 2009 edition has there been a requirement that the air tightness be verified by testing. This testing requirement closes what many have considered a loophole in the code, but the new requirement has met some resistance in some places. In some jurisdictions considering adoption of the 2009 IECC questions have been raised:

- What will be the additional cost of this requirement?
- Who will be performing the tests?
- Who will be reviewing the test results?
- How many additional inspections could this involve?

As an example, College Place, Texas, adopted the 2009 IECC, but amended it to exclude this testing provision and only require a visual inspection of the ducts. However, other areas of the country, such as the state of Washington, have retained the new testing provision. Washington also made a couple of unique amendments to the provisions:

1. All testing must be done by a qualified technician. The minimum qualification requirement is documented attendance at a duct testing training course approved by the building official. The following existing training programs are recognized as equivalent to this requirement:

a. Performance Testing training for new construction
b. Performance Tested Comfort Systems (PTCS) training for existing homes and new construction

2. Duct systems must be designed, sized, and installed using recognized industry standards and International Residential Code® (IRC) requirements, so that calculated heating and/or cooling loads are delivered to each zone.

Photo 2. Air Sealing — Drain pipe with spray foam insulation

Since the adoption of Washington's new code, which will become effective July 1, 2010, they have been providing training throughout the state to code officials, builders, architects and contractors on verifying duct air tightness. More information can be found athttp://www.energy.wsu.edu/code/default.cfm

What are the specific duct testing requirements of the 2009 IECC?

The 2009 IECC offers the builder quite a bit of flexibility in meeting its duct tightness requirements. The test can be done either immediately after rough-in of the ducts or later, after the home is completed. Testing at rough-in makes it easier to correct leaks without tearing down

building components or using potentially more costly in-duct sealing equipment. Testing at home completion, on the other hand, allows testing the amount of leakage to outdoors rather than simply the total leakage, the theory being that leaks to the indoors are not as bad as leaks to outdoors.

The code leaves it to the local official to determine who must conduct the test. Some will allow the duct installer to do the testing on the theory that the installer can find and correct leaks more quickly and at less cost if s/he is the one doing the test. Others may require a third-party tester.

The specific test requirements are based on the flow rate of air at a specified pressure of 25 Pascals when register boots are sealed shut. The requirement is normalized by the size of the home and expressed per 100 $ft^2$of conditioned floor area:

Post construction test

Maximum of 8 CFM/100ft^2leakage to outdoors

–*OR*Maximum of 12 CFM/100ft^2total leakage

Rough-in test

Maximum of 6 CFM/100ft^2total leakage

– *OR*Maximum of 4 CFM/100ft^2total leakage if air handler is not installed at the time of the test

Building Envelope Leakage Verification

In adopting the 2009 IECC, Washington State amended the air sealing requirements to exclude the visual inspection option for new homes and any new addition greater than 500 square feet. The testing may be done by the builder or contractor, eliminating the need for an independent third party to run the tests. Builders who decide to do their own testing will need to purchase the equipment and train personnel. Eliminating the option for visual inspections reduces the labor required of the code official for inspections. Other states and jurisdictions that adopt the 2009 IECC will need to develop protocols and processes to confirm that proper air sealing has been demonstrated and meets the provisions of the code.

What are the new air sealing requirements in the 2009 IECC?

Testing Option– The specific test requirements are based on the flow rate of air produced by a "blower door" at a specified pressure of 50 Pascals when exterior doors are closed, dampers are closed but not otherwise sealed, exterior openings for continuous ventilation systems and heat recovery ventilators are closed but not sealed, HVAC systems are turned off, and duct supply and return registers are not covered or sealed. The requirement is expressed in air changes per hour (ACH), which takes account of the overall size (volume) of the home:

Total air leakage < 7 ACH (air changes per hour)

What is a blower door? It is a powerful fan that attaches and seals to the door (typically the entrance door to the home) and blows air into or out of the house to pressurize or depressurize the home. The inside-outside pressure difference will cause air to force its way through any cracks in the building thermal envelope. Measuring the flow rate at the specified test pressure gives an indication of the leakiness of the envelope.

Visual Inspection Option– building envelope tightness and insulation installation is considered acceptable when the items in Table 402.4.2 of the 2009 IECC, applicable to the method of construction, are field verified (see figure 1).

Figure 1. IECC-2009, Table 402.4.2 Air Barrier and Insulation Inspection Component Criteria

High Efficacy Lighting

Figure 2. Status of State Residential Energy Code adoption

The 2009 IECC®, Chapter 2, defines*high efficacy lamps*as compact fluorescent lamps, T-8 or smaller diameter linear fluorescent lamps, or lamps with a minimum efficacy of:

60 lumens per watt for lamps > 40 watts,
50 lumens per watt for lamps > 15 watts and ≤ 40 watts, and
40 lumens per watt for lamps < 15 watts

Why pay attention to these new duct testing, air leakage, and lamp efficacy requirements in the 2009 IECC? Currently, fourteen states have officially adopted the 2009 IECC. Of these states, six will have an effective date in the latter part of 2010 or early 2011. Within the next three years, approximately thirty-three states will have adopted and implemented the 2009 IECC or something equivalent or more stringent, as shown in figure 2. As more states put these

requirements in place, the number of your projects that may be affected is likely to increase. Becoming familiar with the new requirements now before they are required is likely a good approach to most effectively incorporating them into the building process.

References

[1]2009 IECC®, Chapter 2, Definitions; Building Thermal Envelope – The basement walls, exterior walls, floor, roof, and any other building element that enclose conditioned space. This boundary also includes the boundary between conditioned space and any exempt or unconditioned space.<

[2]2009 IECC®, Chapter 2, Definitions; Air Barrier – material(s) assembled and joined together to provide a barrier to air leakage through the building envelope. An air barrier may be a single material or a combination of materials. 2009 IECC®, Chapter 2, Definitions; Building Thermal Envelope – The basement walls, exterior walls, floor, roof, and any other building element that enclose conditioned space. This boundary also includes the boundary between conditioned space and any exempt or unconditioned space.

Sent from my iPad

Code Enforcement Officer

From: Daniel Vincent <bildah@comcast.net>
Sent: Monday, February 25, 2019 12:18 AM
To: Code Enforcement Officer
Subject: The 2009 IECC: Increased Inspections and Testing Lead to Increased Energy Savings | IAEI News magazine

https://iaeimagazine.org/magazine/2010/05/16/the-2009-iecc-increased-inspections-and-testing-lead-to-increased-energy-savings/

The 2009 IECC: Increased Inspections and Testing Lead to Increased Energy Savings

May 16, 2010

What's happening with energy efficiency in existing and new residential homes?

The U.S. Department of Energy (DOE) is committed to improving the most popular model residential energy code by 30% by 2012 and moving to net zero energy homes by 2020. The first major step toward those goals is embodied in the 2009 International Energy Conservation Code® (IECC), which by various estimates is 12% to 15% more energy efficient than its 2006 predecessor. Key new provisions in the 2009 IECC include:

- Mandatory pressure testing of ducts
- Mandatory pressure testing of envelope leakage or visual inspection based on a defined checklist
- Requirement that 50% of all lamps be high efficacy

These changes not only move toward DOE's goals for improving the code, but are beginning to make their way into state and local building codes, where they will become part of the new standard practices for improving energy efficiency in the residential building industry. In so doing, they will create the need for some new/enhanced inspections and require a new level of testing expertise.

Photo 1

Duct Testing

Prior versions of the IECC have required that ducts not installed within the thermal building envelope[1] be insulated and sealed, but not until the 2009 edition has there been a requirement that the air tightness be verified by testing. This testing requirement closes what many have considered a loophole in the code, but the new requirement has met some resistance in some places. In some jurisdictions considering adoption of the 2009 IECC questions have been raised:

- What will be the additional cost of this requirement?
- Who will be performing the tests?
- Who will be reviewing the test results?
- How many additional inspections could this involve?

As an example, College Place, Texas, adopted the 2009 IECC, but amended it to exclude this testing provision and only require a visual inspection of the ducts. However, other areas of the country, such as the state of Washington, have retained the new testing provision. Washington also made a couple of unique amendments to the provisions:

1. All testing must be done by a qualified technician. The minimum qualification requirement is documented attendance at a duct testing training course approved by the building official. The following existing training programs are recognized as equivalent to this requirement:

a. Performance Testing training for new construction
b. Performance Tested Comfort Systems (PTCS) training for existing homes and new construction

2. Duct systems must be designed, sized, and installed using recognized industry standards and International Residential Code® (IRC) requirements, so that calculated heating and/or cooling loads are delivered to each zone.

Photo 2. Air Sealing — Drain pipe with spray foam insulation

Since the adoption of Washington's new code, which will become effective July 1, 2010, they have been providing training throughout the state to code officials, builders, architects and contractors on verifying duct air tightness. More information can be found athttp://www.energy.wsu.edu/code/default.cfm

What are the specific duct testing requirements of the 2009 IECC?

The 2009 IECC offers the builder quite a bit of flexibility in meeting its duct tightness requirements. The test can be done either immediately after rough-in of the ducts or later, after the home is completed. Testing at rough-in makes it easier to correct leaks without tearing down

building components or using potentially more costly in-duct sealing equipment. Testing at home completion, on the other hand, allows testing the amount of leakage to outdoors rather than simply the total leakage, the theory being that leaks to the indoors are not as bad as leaks to outdoors.

The code leaves it to the local official to determine who must conduct the test. Some will allow the duct installer to do the testing on the theory that the installer can find and correct leaks more quickly and at less cost if s/he is the one doing the test. Others may require a third-party tester.

The specific test requirements are based on the flow rate of air at a specified pressure of 25 Pascals when register boots are sealed shut. The requirement is normalized by the size of the home and expressed per 100 ft^2 of conditioned floor area:

Post construction test

Maximum of 8 CFM/100ft^2 leakage to outdoors

–*OR* Maximum of 12 CFM/100ft^2 total leakage

Rough-in test

Maximum of 6 CFM/100ft^2 total leakage

– *OR* Maximum of 4 CFM/100ft^2 total leakage if air handler is not installed at the time of the test

Building Envelope Leakage Verification

In adopting the 2009 IECC, Washington State amended the air sealing requirements to exclude the visual inspection option for new homes and any new addition greater than 500 square feet. The testing may be done by the builder or contractor, eliminating the need for an independent third party to run the tests. Builders who decide to do their own testing will need to purchase the equipment and train personnel. Eliminating the option for visual inspections reduces the labor required of the code official for inspections. Other states and jurisdictions that adopt the 2009 IECC will need to develop protocols and processes to confirm that proper air sealing has been demonstrated and meets the provisions of the code.

What are the new air sealing requirements in the 2009 IECC?

Testing Option– The specific test requirements are based on the flow rate of air produced by a "blower door" at a specified pressure of 50 Pascals when exterior doors are closed, dampers are closed but not otherwise sealed, exterior openings for continuous ventilation systems and heat recovery ventilators are closed but not sealed, HVAC systems are turned off, and duct supply and return registers are not covered or sealed. The requirement is expressed in air changes per hour (ACH), which takes account of the overall size (volume) of the home:

Total air leakage < 7 ACH (air changes per hour)

What is a blower door? It is a powerful fan that attaches and seals to the door (typically the entrance door to the home) and blows air into or out of the house to pressurize or depressurize the home. The inside-outside pressure difference will cause air to force its way through any cracks in the building thermal envelope. Measuring the flow rate at the specified test pressure gives an indication of the leakiness of the envelope.

Visual Inspection Option– building envelope tightness and insulation installation is considered acceptable when the items in Table 402.4.2 of the 2009 IECC, applicable to the method of construction, are field verified (see figure 1).

Figure 1. IECC-2009, Table 402.4.2 Air Barrier and Insulation Inspection Component Criteria

High Efficacy Lighting

Figure 2. Status of State Residential Energy Code adoption

The 2009 IECC®, Chapter 2, defines*high efficacy lamps*as compact fluorescent lamps, T-8 or smaller diameter linear fluorescent lamps, or lamps with a minimum efficacy of:

60 lumens per watt for lamps > 40 watts,
50 lumens per watt for lamps > 15 watts and ≤ 40 watts, and
40 lumens per watt for lamps < 15 watts

Why pay attention to these new duct testing, air leakage, and lamp efficacy requirements in the 2009 IECC? Currently, fourteen states have officially adopted the 2009 IECC. Of these states, six will have an effective date in the latter part of 2010 or early 2011. Within the next three years, approximately thirty-three states will have adopted and implemented the 2009 IECC or something equivalent or more stringent, as shown in figure 2. As more states put these

requirements in place, the number of your projects that may be affected is likely to increase. Becoming familiar with the new requirements now before they are required is likely a good approach to most effectively incorporating them into the building process.

References

[1]2009 IECC®, Chapter 2, Definitions; Building Thermal Envelope – The basement walls, exterior walls, floor, roof, and any other building element that enclose conditioned space. This boundary also includes the boundary between conditioned space and any exempt or unconditioned space.<

[2]2009 IECC®, Chapter 2, Definitions; Air Barrier – material(s) assembled and joined together to provide a barrier to air leakage through the building envelope. An air barrier may be a single material or a combination of materials. 2009 IECC®, Chapter 2, Definitions; Building Thermal Envelope – The basement walls, exterior walls, floor, roof, and any other building element that enclose conditioned space. This boundary also includes the boundary between conditioned space and any exempt or unconditioned space.

Sent from my iPad