IECC COMPLIANCE OPTIONS FOR WOOD-FRAME WALL ASSEMBLIES

APA

ICC INTERNATIONAL CODE COUNCIL

IECC COMPLIANCE OPTIONS FOR WOOD-FRAME WALL ASSEMBLIES

Copyright © 2017

By

International Code Council Inc.
500 New Jersey Avenue, NW, 6th Floor
Washington, DC 20001

And

APA – The Engineered Wood Association
7011 South 19th Street
Tacoma, Washington 98466

Portions of this publication reproduce excerpts from the 2015 International Energy Conservation Code®, International Code Council, Inc., Washington, D.C. Reproduced with permission. All rights reserved. www.iccsafe.org

ALL RIGHTS RESERVED. *IECC Compliance Options for Wood-Frame Wall Assemblies* is a copyrighted work owned by the International Code Council, Inc. and *APA — The Engineered Wood Association* (IRC and other code sections copyrighted solely by ICC). Without advance written permission from the publishers, no part of this publication may be reproduced, distributed, or transmitted in any form or by any means, including without limitation, electronic, optical or mechanical means (this includes, by way of example and not limitation, photocopying or recording by or in an information storage retrieval system). For information on permission to copy material exceeding fair use, please contact:

ICC Publications, 4051 West Flossmoor Road, Country Club Hills, IL 60478; Phone 1-888-ICC-SAFE (422-7233)

APA, 7011 South 19th Street, Tacoma, WA 98466; Phone (253) 565-6600

The information contained in this publication is believed to be accurate; however, it is being provided for informational purposes only. Publication of this document by the ICC or APA should not be construed as the ICC or APA engaging in or rendering engineering, legal or other professional services. Use of the information contained in this publication should not be considered by the user as a substitute for the advice of a registered professional engineer, attorney or other professional. If such advice is required, it should be sought through the services of a registered professional engineer, licensed attorney or other professional.

Trademarks: "International Code Council," the "International Code Council" logo and the "International Residential Code" are trademarks of the International Code Council, Inc.

Form No. P320A/Revised May 2017

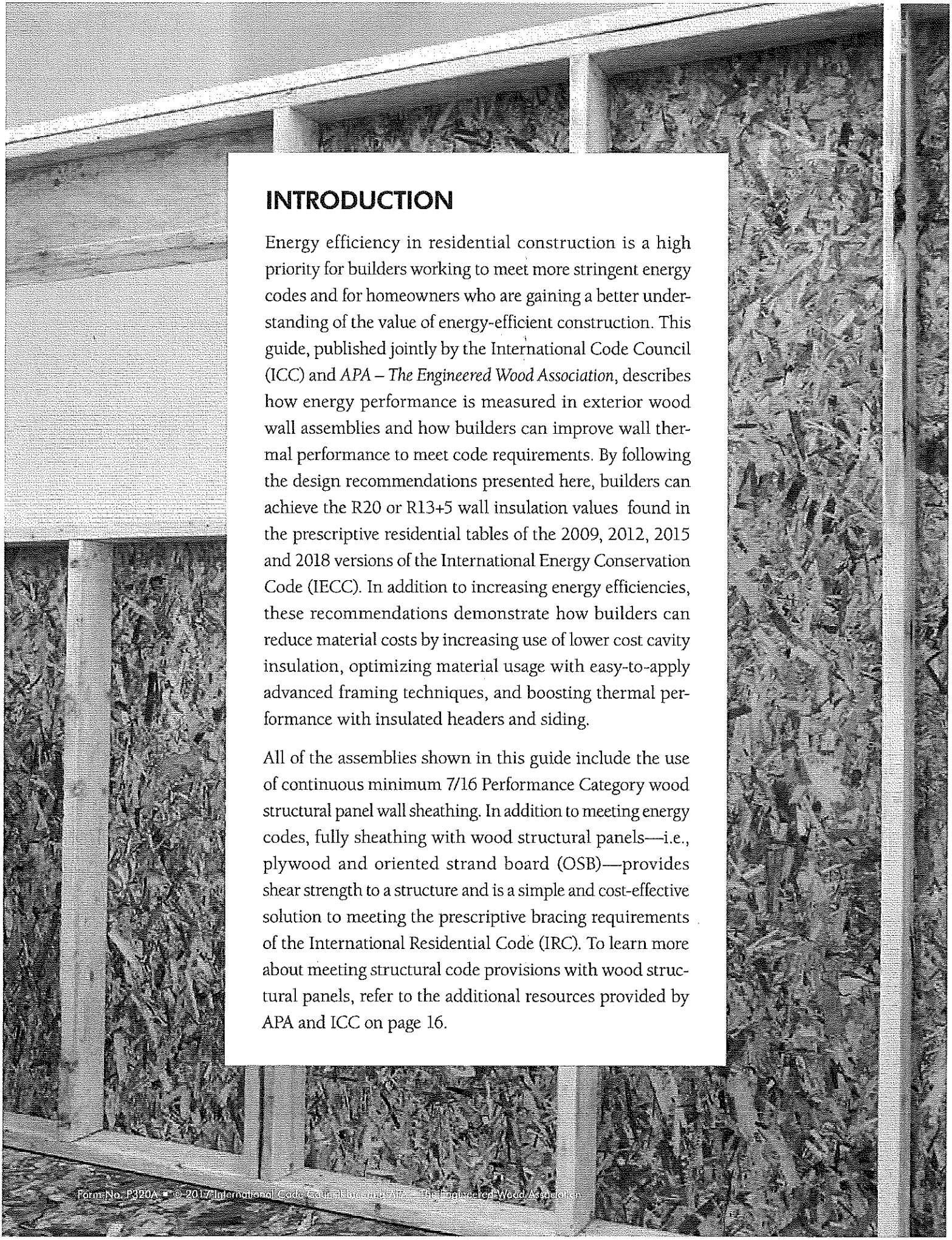

INTRODUCTION

Energy efficiency in residential construction is a high priority for builders working to meet more stringent energy codes and for homeowners who are gaining a better understanding of the value of energy-efficient construction. This guide, published jointly by the International Code Council (ICC) and *APA – The Engineered Wood Association*, describes how energy performance is measured in exterior wood wall assemblies and how builders can improve wall thermal performance to meet code requirements. By following the design recommendations presented here, builders can achieve the R20 or R13+5 wall insulation values found in the prescriptive residential tables of the 2009, 2012, 2015 and 2018 versions of the International Energy Conservation Code (IECC). In addition to increasing energy efficiencies, these recommendations demonstrate how builders can reduce material costs by increasing use of lower cost cavity insulation, optimizing material usage with easy-to-apply advanced framing techniques, and boosting thermal performance with insulated headers and siding.

All of the assemblies shown in this guide include the use of continuous minimum 7/16 Performance Category wood structural panel wall sheathing. In addition to meeting energy codes, fully sheathing with wood structural panels—i.e., plywood and oriented strand board (OSB)—provides shear strength to a structure and is a simple and cost-effective solution to meeting the prescriptive bracing requirements of the International Residential Code (IRC). To learn more about meeting structural code provisions with wood structural panels, refer to the additional resources provided by APA and ICC on page 16.

Form No. P320A ■ © 2017 International Code Council, Inc. and APA – The Engineered Wood Association

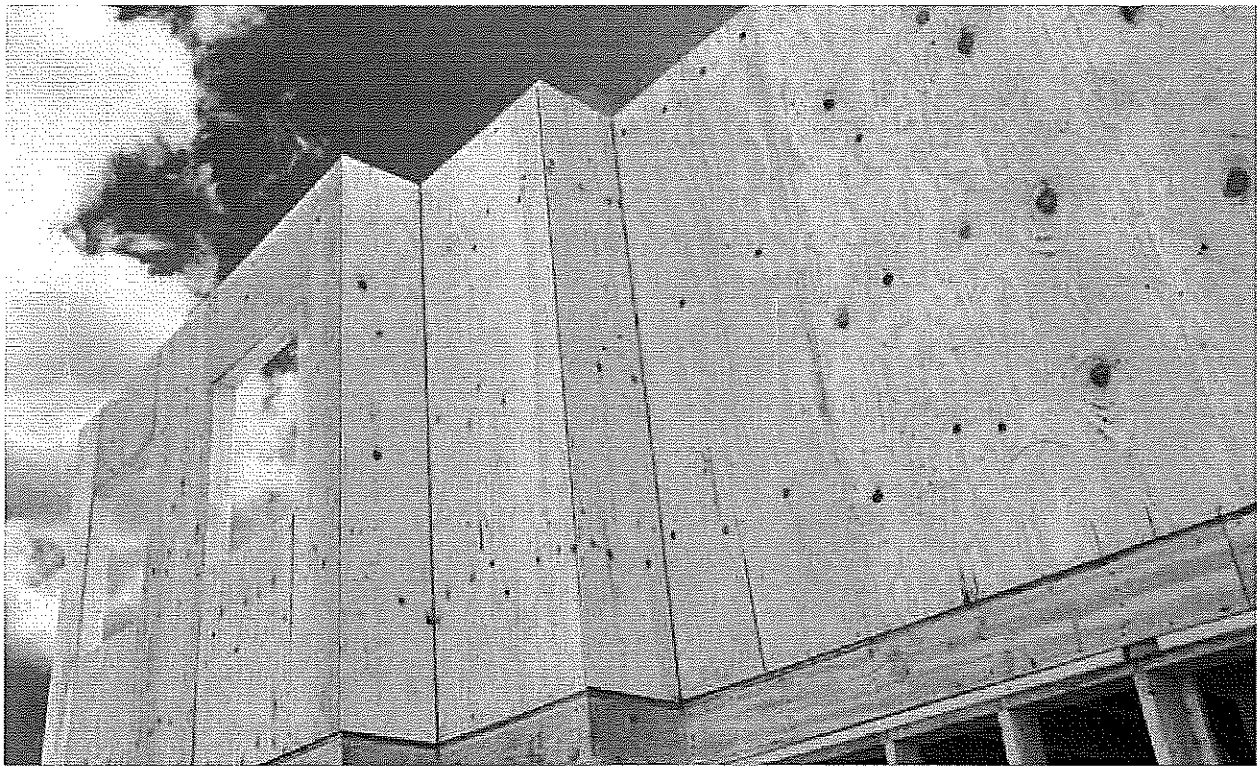

ENERGY EFFICIENCY OF WOOD-FRAME WALLS

In residential construction, exterior walls are comprised of solid wall sections, windows, and doors. The subject of this publication is conductive heat flow through solid (opaque) wall sections. Conductive heat transfer through the walls is determined by the heat resistance or R-values of the different components of the wall assembly. Typical components include framing, interior gypsum, exterior wall sheathing, exterior claddings, insulation, and interior and exterior air films.

Heat transfer occurs through three parallel paths in the opaque wall, as shown in Figure 1:

1. Through areas of the wall containing cavity insulation. This path usually has the greatest amount of heat resistance because there is no framing material to displace insulation. While wood framing is a good insulator, heat is transferred through framing components at a higher rate than through insulation between framing.

2. Through areas of the wall containing framing studs and plates, including all of the vertical framing members, top and bottom wall plates, and full-cavity width blocking.

3. Through areas of the wall containing framing headers that carry structural loads above window and door openings. Often, the structural headers can accommodate insulation, or the structural portion of the header can be reduced in thickness to provide space for insulation.

When calculating the overall R-value or U-factor of a solid exterior wall assembly (excluding fenestrations), the R-values of each component through the entire thickness of the wall in each of the three parallel paths must first be determined. The R-value for a given path is the sum of the R-values of all of the components within the path. Each path or section R-value is then converted to a U-factor and multiplied by the percentage of the solid wall area that the section represents. (Note that U-factors are generally the inverse of R-values and are used to evaluate multiple heat flow paths within a single assembly, such as walls.) These values are summed to determine the overall U-factor for the solid wall.

FIGURE 1

TYPICAL WALL ASSEMBLY AND HEAT TRANSFER PATHS

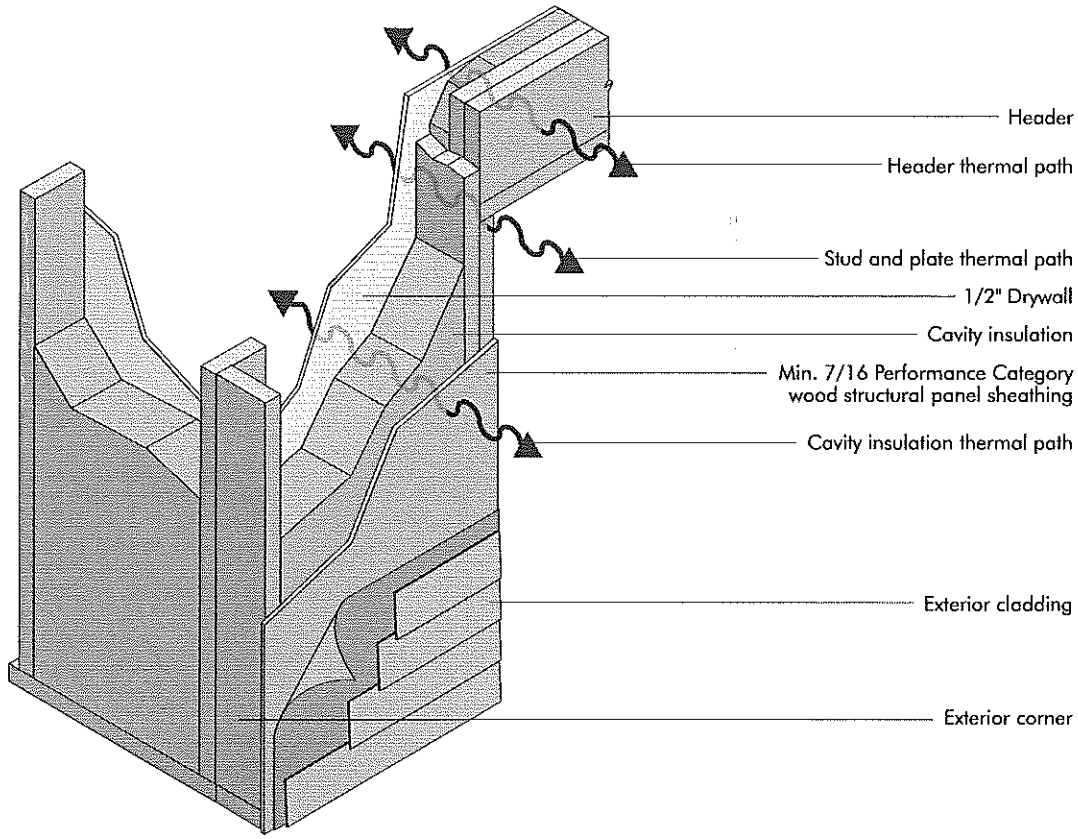

METHODOLOGIES AND NOTES

The IECC provides four different compliance options for residential buildings. The most easy-to-use option is the prescriptive insulation and fenestration compliance path provided in Section R402. The assemblies in this publication are deemed to be equivalent to the frame wall assemblies of the prescriptive insulation requirements specified in Table R402.1.1 of the 2009 and 2012, and Table R402.1.2 of the 2015 IECC for those climate zones that require R20 or R13+5 insulation. A two-dimensional assembly U-factor calculation using the parallel path method as outlined in *ASHRAE Handbook – Fundamentals* (Chapter 27) was used to determine the assemblies that are equivalent to the R20 benchmark wall assemblies based on the insulation requirements of IECC. This methodology utilizes the U-factors shown in Table 4 of ESR-2586,[1] issued in accordance with the acceptable criteria for determining wood-frame wall assemblies as noted in ICC-ES Environmental Criteria EC115[2] and Section R102 of the IECC,[3] to show equivalency to the 2009 and 2012 IECC. To show equivalency to the 2015 IECC, this methodology utilizes Table R402.1.4 in the 2015 code. (Note for energy raters: During the 2015 IECC code development process, all frame wall U-factors in Table R402.1.3 of the 2012 IECC were revised. The equivalent U-factor for R20 or R13+5 wall assemblies is 0.060 in the 2015 code.)

FOOTNOTES

1. ICC Evaluation Service, ESR-2586 (Revised February 2017)
2. International Code Council Evaluation Service, Environmental Criteria EC115, *Environmental Criteria for Determination of Equivalent Wood Frame Wall Assemblies to the Prescriptive Building Thermal Envelope Requirements of the International Energy Conservation Code and the International Residential Code* (Effective Date: October 1, 2012)
3. International Energy Conservation Code, Section R102 Alternate materials – method of construction, design or insulating systems

DESIGN CONSIDERATIONS FOR ENERGY EFFICIENT WALL ASSEMBLIES

There are a number of key considerations, in addition to the value of the cavity insulation, that affect the U-factor calculation for wall assemblies. Several of the most common factors are described here; additional energy efficiencies can be realized by varying other aspects of the wall system.

FRAMING FACTORS

The term "framing factor" is used to express a percentage of the total solid exterior wall area occupied by framing members, including headers. The remaining balance of the solid exterior wall area is composed of insulation. According to a study performed for ASHRAE in 2001, there is very little regional variation in wall framing factors for attached, detached and multifamily dwellings. The report recommended a residential wall framing factor of 25 percent for inclusion in the ASHRAE Handbook of Fundamentals.[4]

Framing Factor

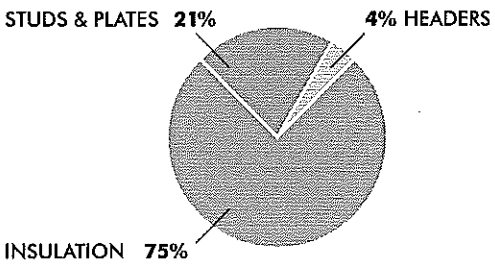

The wood wall U-factors in the IECC are calculated based on the assumption that the area of a standard residential wall (solid portions, excluding fenestration) consists of 25 percent framing and 75 percent insulation. This percentage of framing includes headers, which are typically 4 percent of the wall area, plus studs, plates and full-cavity width blocking. Framing that does not bridge the insulation (e.g., exterior or interior strapping, let-in bracing, rim joist) is excluded.

Framing factors can vary considerably, depending on the type of construction, design and job site framing practices. An understanding of wall framing factors and insulated wall headers is important in determining the most cost-effective wall assembly options. By reducing the framing factor, the builder is able to increase the amount of insulation and achieve greater overall energy performance.

ADVANCED FRAMING

The framing factor for a solid wall assembly can be reduced by adopting advanced framing techniques to increase energy efficiency. Common advanced framing techniques include the following, which are detailed in APA's *Advanced Framing Construction Guide*, Form M400, available from www.apawood.org:

- **Wall stud spacing.** In standard framing, 16-inch on center spacing is typical. Advanced framing increases stud spacing to as much as 24 inches on center for greater cavity insulation space.
- **Corner framing.** Standard wall corners are often framed in a manner that results in enclosed corner cavities that are difficult to insulate effectively. Advanced corner framing techniques permit insulation to extend into corners.
- **Insulated interior-exterior wall intersections.** Advanced framing uses flat-wise horizontal blocking or other means to provide a means for drywall attachment where interior walls intersect with exterior walls. This provides room for insulation in the exterior walls at these intersections.

FOOTNOTE

4. Enermodal Engineering Ltd., *Characterization of Framing Factors for New Low-Rise Residential Building Envelopes (904-RP)* (August 2001)

Form No. P320A ■ © 2017 International Code Council Inc. and APA – The Engineered Wood Association

- **Framing support members around openings.** Advanced framing eliminates unnecessary cripples, jack studs, full-cavity width blocking and bridging.
- **Single top plates.** Advanced framing can also incorporate the use of single top plates in the wall, provided roof, wall and floor framing members are aligned and other code limitations are satisfied.

As shown in Table 1, the IECC, *ASHRAE Handbook – Fundamentals*, and RES*check*™ are all based on a 25 percent framing factor assumption for standard wall construction. The other referenced documents included in Table 1 are intended to provide the reader with a basis for determining how advanced framing techniques affect the framing factor percentage.

Table 1. Referenced Framing Percentages or Framing Factors

FRAMING FOR WOOD-FRAME WALLS
STUD SIZE – 1-1/2" x 3-1/2" (2x4) OR 1-1/2" x 5-1/2" (2x6)
(FRAMING PERCENTAGE INCLUDES 4% HEADERS)

	CONVENTIONAL FRAMING		ADVANCED FRAMING[a]		
CODE	**16" oc**	**24" oc**	**16" oc**	**24" oc**	**COMMENTS**
ASHRAE Handbook – Fundamentals	25%	22%			IECC-recognized standard
RES*check*™	25%	22%			IECC-recognized software
OTHER REFERENCED SOURCES					
RESNET/ANSI/ICC Standard 301	23%	20%	19%	16%	Home Energy Rating System (HERS)
US Energy Star Program	23%	20%	19%	16%	References RESNET Table
Canadian Energy Star Program	23%	20%		16%	Consistent with US Energy Star
National Building Code – Canada	23%	20%	19%	16%	Advanced framing with double top plates

a. See *Advanced Framing Construction Guide*, APA Form M400, available from www.apawood.org.

From the references in Table 1, the following framing factor reductions can be reasonably estimated:

- Increasing stud spacing from 16 to 24 inches on center results in a 3 percent reduction.
- Incorporating the additional advanced framing techniques (with the exception of single top plates) yields an additional reduction of up to 4 percent.

The percentages listed in Table 1 are provided as a reference only. The actual framing factor percentage for each advanced framing technique incorporated must be determined by the builder or energy designer for a given project. Builders and designers can estimate their house plan framing factors by dividing the exterior wall area represented by framing (including headers, plates and framing around all openings) by the exterior solid wall area.

Form No. P320A ■ © 2017 International Code Council Inc. and APA – The Engineered Wood Association

HEADER R-VALUES

Wall assemblies can incorporate standard headers or insulated headers. In a standard header, the wall cavity space over the opening is typically filled by wood framing. When gravity loads do not require large headers, the amount of space occupied by structural wood members in the header can often be reduced to provide greater space for cavity insulation. Common types of insulated headers include:

- **Single-ply headers that use one thickness of lumber or engineered wood to support loads over openings.** The balance of the wall thickness can be filled with cavity insulation. For example: when a single 2x10 header (1-1/2-inch-thick) is used in a 3-1/2-inch-thick wall, two inches of cavity insulation can be added to net a total header area R-value of 10 or greater. (See Table 2.)

- **Double-ply headers with added insulation.** While double-ply headers leave less room for insulation, there is still opportunity to increase the thermal performance. For example: when a double 2x10 header (3-inch thick) is used in a 3-1/2-inch wall, 1/2-inch of cavity insulation can be added. If 1/2-inch EPS rigid board insulation or polyisocyanurate is used to fill the open area, the insulation value of the header increases from R4.38 to R5.8 and R6.8, respectively. Even greater R-values can be realized in headers in 2x6 walls due to the additional wall thickness.

- **Wood structural panel box headers with insulation.** Box headers incorporate the exterior wood sheathing and the framing to make a continuous box beam with space inside the header for cavity insulation. The insulation level of a box beam header can come close to the level of cavity insulation in the surrounding wall assembly. Section R602.7.3 of the 2015 IRC provides further details.

- **Integrated Rim Headers that allow for full-depth insulation over window or door openings.** Rim headers are an excellent option when an I-joist floor system bears on a double top plate above a 2 x 6 wall. The insulation level of a rim header permits R-values in the 5.5-inch cavity that range from R18 to R21 or higher. Prescriptive provisions for lumber rim headers are included in Section R602.7.2 of the 2015 IRC. Information on the use of structural composite lumber rim headers and I-joist floor systems is included in APA M400.

Form No. P320A ■ © 2017 International Code Council Inc. and APA – The Engineered Wood Association

Table 2 provides example insulation values for frequently used header types. To achieve the tabulated R-values, a variety of cavity insulation R-values for the headers are indicated in the table.

Table 2. Insulation Values for Frequently Used Header Components[a]

HEADER TYPE	COMPONENT R-VALUES		TOTAL R-VALUE
2x4 WALL	**WOOD**	**INSULATION[b]**	
Solid engineered wood or lumber header (3-1/2" wood)	R4.38	0	R4.38
Wood structural panel box header (3-1/2" insulation)	0	R13	R10.0[c]
Single-ply header (1-1/2" wood and 2" insulation)	R1.9	R8	R9.9
Double-ply header (3" wood and 1/2" insulation)	R3.8	R2	R5.8
2x6 WALL			
Solid engineered wood or lumber header (5-1/2" wood)	R6.88	0	R6.88
Wood structural panel box header (5-1/2" insulation)	0	R18	R14.5[c]
Single-ply header (1-1/2" wood and 4" insulation)	R1.9	R16	R17.9
Double-ply header (3" wood and 2-1/2" insulation)	R3.8	R10	R13.8
Integrated Rim Header	0	R18-21 typ.	R18-21

a. Common insulation products are shown in the table below. Specific R-values of the insulation products are identified on the proprietary product, the packaging of the product, or in documentation provided by the builder or the installer of the insulation product. This table is only meant to be used as a guide in selecting a general type of insulation product. Higher efficiency insulation may be found.

BATT	R-VALUE/ THICKNESS
3-1/2" low density fiberglass	R11
3-1/2" regular density fiberglass	R13
3-1/2" high density fiberglass	R15
6-1/4" low density fiberglass (R19 compressed to 5-1/2")	R18
5-1/2" high density fiberglass	R21
3-1/2" rockwool	R15
5-1/2" rockwool	R23

RIGID BOARD/ SHEETS	R-VALUE/ INCH
Expanded Polystyrene (EPS)	R4
Extruded Polystyrene (XPS)	R5
Polyisocyanurate (faced)	R6
Rockwool	R4

LOOSE-FILL/ SPRAY-APPLIED	R-VALUE/ INCH
Cellulose	R3.6
Glass fiber	R3.6
Polyurethane low density	R3.6
High density glass fiber	R4.3+
Polyurethane high density	R5+

b. The listed R-values are based on the use of R4 rigid board insulation (fiberglass batt insulation for box headers).

c. The total R-value shown for box headers considers both insulation and framing. 15% of the header area is assumed to be framing. The actual R-value will vary based on box header design.

Form No. P320A ■ © 2017 International Code Council Inc. and APA – The Engineered Wood Association

IECC-COMPLIANT WOOD-FRAME WALL ASSEMBLIES

The wall assemblies provided in this guide comply with the R20 or R13+5 prescriptive requirements of the 2009, 2012, 2015 and 2018 IECC. Each example includes continuous minimum 7/16 Performance Category wood structural panel wall sheathing with either wood or vinyl siding. In each example, the interior and exterior air films and drywall R-values are held constant. Air film R-values account for the thermal resistances of the interior and exterior surfaces of the assembly.

Other wall section components are treated as variable, including:

- Assemblies A, B, and C are 2x6 walls that use R19 compressed fiberglass batts (equivalent to R18) as cavity insulation.
- Assembly D is similar to assembly A but has a higher net effective wall R-value and improved U-factor due to more extensive use of advanced framing techniques.
- Assembly E is an alternate prescriptive 2x4 assembly for those instances in which 2x6 walls cannot be incorporated into a house plan. It includes insulated siding over wood structural panel sheathing as well as advanced framing techniques and higher performance cavity insulation.

Assembly D is included to illustrate the thermal performance of a wall assembly which incorporates a number of additional energy-efficient techniques. This example is intended to provide guidance to builders and energy designers who seek greater wall thermal performance in their 2x6 walls, while using wood structural panel wall sheathing.

The wall assemblies in this publication show a variety of insulated corner options. In some cases, drywall clips, or other means of attaching interior drywall, are not shown for clarity.

The wall assemblies in this publication do not constitute an exhaustive list of wood frame assemblies and options to achieve equivalent thermal performance to IECC prescriptive requirements. Additional energy efficient materials can be incorporated into similar assemblies to achieve the same equivalent thermal performance. In addition, the framing factor percentage for each assembly must be confirmed by the builder or energy designer.

Note that structural code issues, wall bracing, component attachment, and moisture management of the exterior wall assembly are beyond the scope of this publication.

Form No. P320A ■ © 2017 International Code Council Inc. and APA – The Engineered Wood Association

R20 WALL ASSEMBLY A

LOW-DENSITY FIBERGLASS INSULATION / ADVANCED FRAMING TECHNIQUES

In order to offset the performance of lower-cost R19 compressed fiberglass batts (equivalent to R18) as cavity insulation, this 2x6 wall assembly incorporates advanced framing techniques. The assembly includes conventional headers and double top plates. The framing factor is assumed to be no greater than 20 percent.[a]

2x6 with R19 Batt Insulation, Advanced Framing

COMPONENTS		R-VALUES
Wood/Vinyl Siding		0.59
Min. 7/16 Performance Category Wood Structural Panels		0.62
Cavity Insulation (R19 compressed fiberglass batts)		18
5-1/2" Framing	16% framing + 4% headers = 20% framing factor	6.88
5-1/2" Headers – Conventional		6.88
Air films and 1/2" Drywall		1.38
Net Effective R-Value of the Total Solid Wall		16.67
Total Wall U-Factor		0.060

a. 20% framing factor is calculated using studs at 24" o.c. (framing factor = 22%) with a combination of insulated corners, insulated interior-exterior wall intersections and limited cripple supports at door and window openings (4% maximum reduction in framing percentage, 2% assumed). See page 7 for additional information. This assembly is subject to verification and approval by the local authority having jurisdiction.

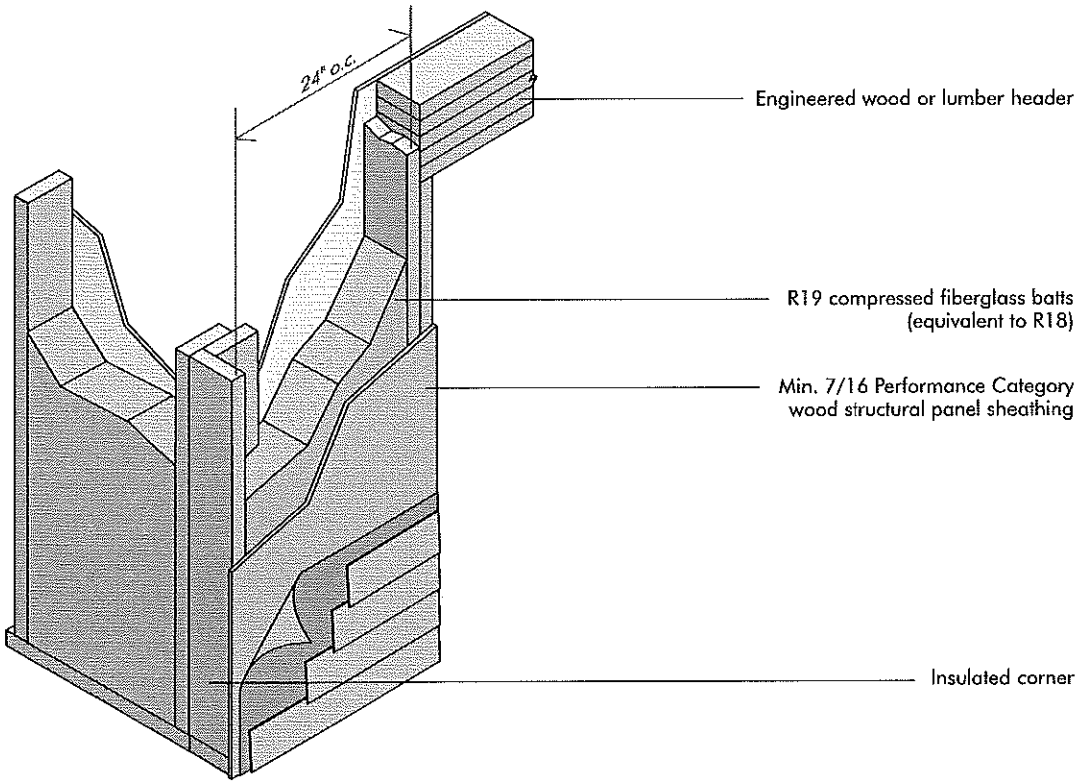

Form No. P320A ■ © 2017 International Code Council Inc. and APA – The Engineered Wood Association

R20 WALL ASSEMBLY B

LOW-DENSITY FIBERGLASS INSULATION / INSULATED HEADERS

This assembly uses insulated headers and advanced framing techniques to increase thermal values. It uses R19 compressed fiberglass batts (equivalent to R18) as cavity insulation. The assembly includes double top plates. The framing factor is assumed to be no greater than 22 percent.[a]

2x6 with R19 Batt Insulation, Insulated Headers, Advanced Framing

COMPONENTS		R-VALUES
Wood/Vinyl Siding		0.59
Min. 7/16 Performance Category Wood Structural Panels		0.62
Cavity Insulation (R19 compressed fiberglass batts)		18
5-1/2" Framing	18% framing + 4% headers = 22% framing factor	6.88
5-1/2" Insulated Headers		9.6[b]
Air films and 1/2" Drywall		1.38
Net Effective R-Value of the Total Solid Wall		16.62
Total Wall U-Factor		0.060

a. 22% framing factor is calculated using studs at 24" o.c. (framing factor = 22%), or studs at 16" o.c. (framing factor = 25%) with a combination of insulated corners, insulated interior-exterior wall intersections and limited cripple supports at door and window openings (4% maximum reduction in framing percentage, 3% assumed). See page 7 for additional information. This assembly is subject to verification and approval by the local authority having jurisdiction.

b. R9.6 represents a triple-ply wood header consisting of 4.5" of wood and 1" of minimum R4/inch insulation. Any header that exceeds this R-value (e.g., an R13.8 double-ply header, as shown in Table 2) can be used.

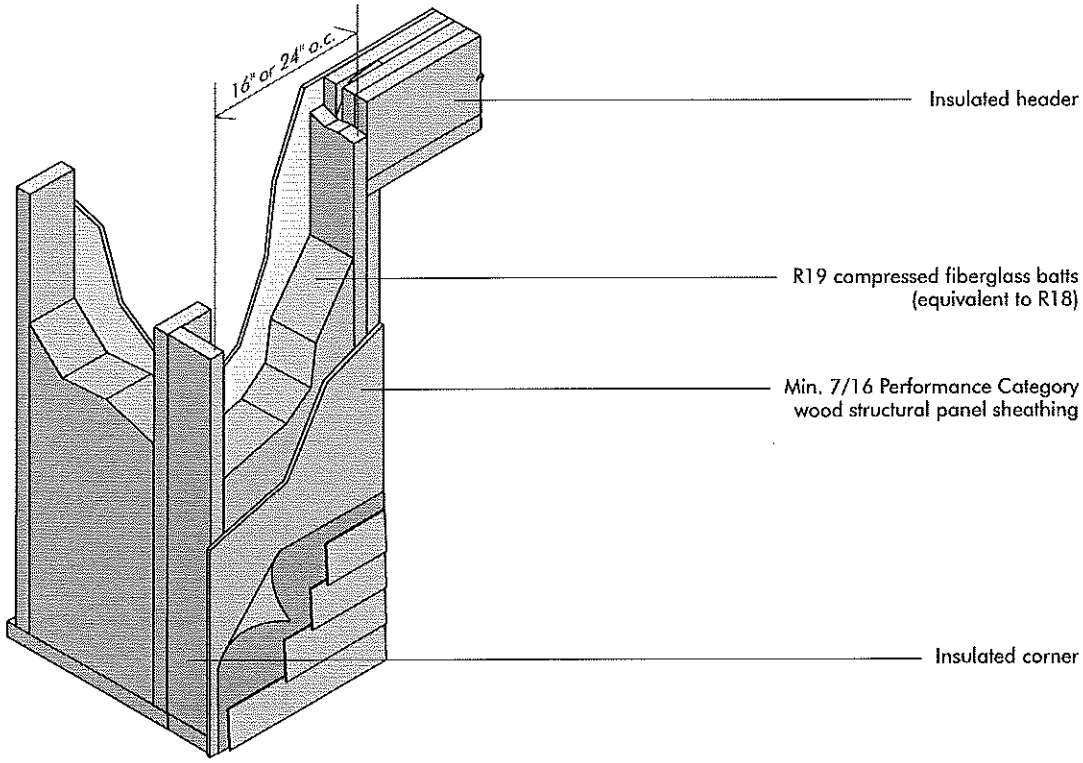

Form No. P320A ■ © 2017 International Code Council Inc. and APA – The Engineered Wood Association

R20 WALL ASSEMBLY C

LOW-DENSITY FIBERGLASS INSULATION / INSULATED SIDING

This assembly uses only conventional framing techniques with 2x6 studs and increases thermal values with insulated siding (a minimum insulation value of R2). The assembly includes conventional headers, double top plates and permits the use of R19 compressed fiberglass batts (equivalent to R18) as cavity insulation. The framing factor is assumed to be no greater than 25 percent.[a]

2x6 with R19 Batt Insulation, R2 Insulated Siding Conventional Framing

COMPONENTS		R-VALUES
Insulated Siding		2.0
Min. 7/16 Performance Category Wood Structural Panels		0.62
Cavity Insulation (R19 compressed fiberglass batts)		18
5-1/2" Framing – Conventional	21% framing + 4% headers = 25% framing factor	6.88
5-1/2" Headers – Conventional		6.88
Air films and 1/2" Drywall		1.38
Net Effective R-Value of the Total Solid Wall		17.52
Total Wall U-Factor		0.057

a. 25% framing factor is calculated using studs at 16" o.c. with no advanced framing techniques (no reduction in framing percentage). See page 7 for additional information. This assembly is subject to verification and approval by the local authority having jurisdiction.

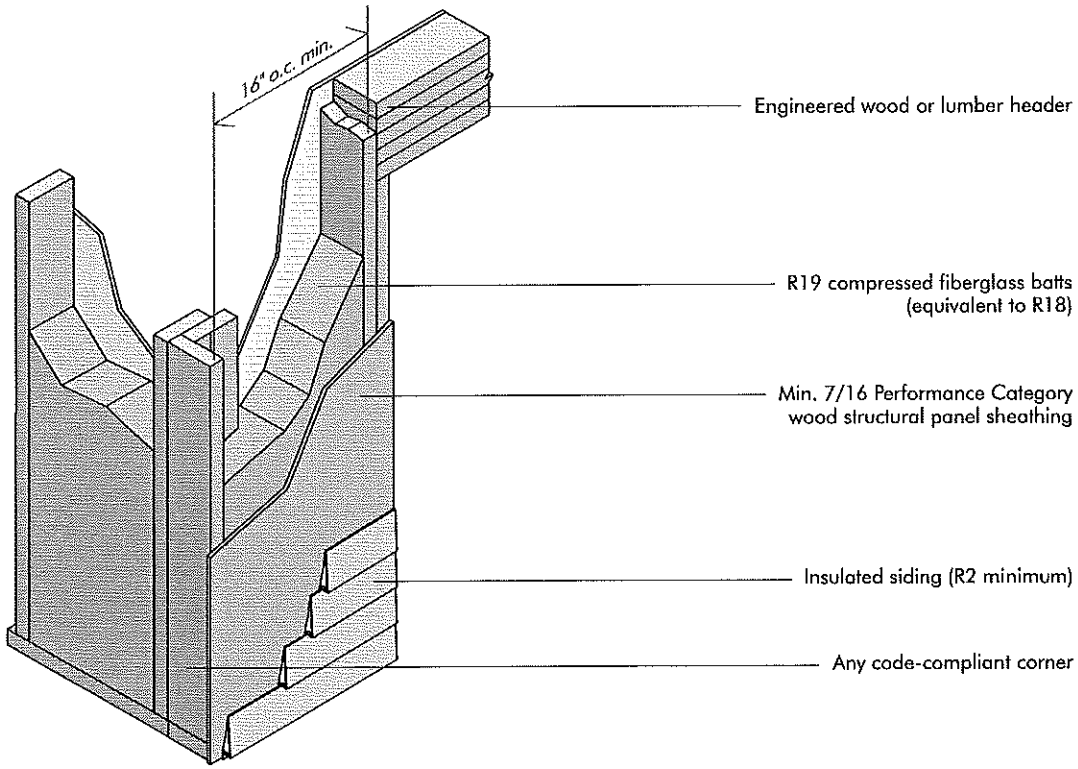

Form No. P320A ■ © 2017 International Code Council Inc. and APA – The Engineered Wood Association

BETTER THAN R20 WALL ASSEMBLY D

AGGRESSIVE ADVANCED FRAMING AND INSULATION LEVELS

This assembly combines several enhancements to achieve a lower U-factor or higher R-value. It features 2x6 framing and a framing factor of no greater than 18 percent through the use of advanced framing techniques. The assembly includes R21 cavity insulation, insulated headers and double top plates. This assembly exemplifies how the performance of a typical 2x6 wall can be improved with the addition of aggressive advanced framing techniques.[a]

2x6 with R21 Batt Insulation, Insulated Headers, Advanced Framing

COMPONENTS		R-VALUES
Wood/Vinyl Siding		0.59
Min. 7/16 Performance Category Wood Structural Panels		0.62
Cavity Insulation (R21 high density fiberglass batts, or equivalent)		21
5-1/2" Framing	14% framing + 4% headers = 18% framing factor	6.88
5-1/2" Insulated Headers		13.8[b]
Air films and 1/2" Drywall		1.38
Net Effective R-Value of the Total Solid Wall		19.24
Total Wall U-Factor		0.052

a. 18% framing factor is calculated using studs at 24" o.c. (framing factor = 22%) with a combination of insulated corners, insulated interior-exterior wall intersections and limited cripple supports at door and window openings (4% reduction in framing percentage). See page 7 for additional information. This assembly is subject to verification and approval by the local authority having jurisdiction.

b. R13.8 represents a double-ply header consisting of 3" of wood and 2-1/2" of minimum R4/inch insulation, as shown in Table 2.

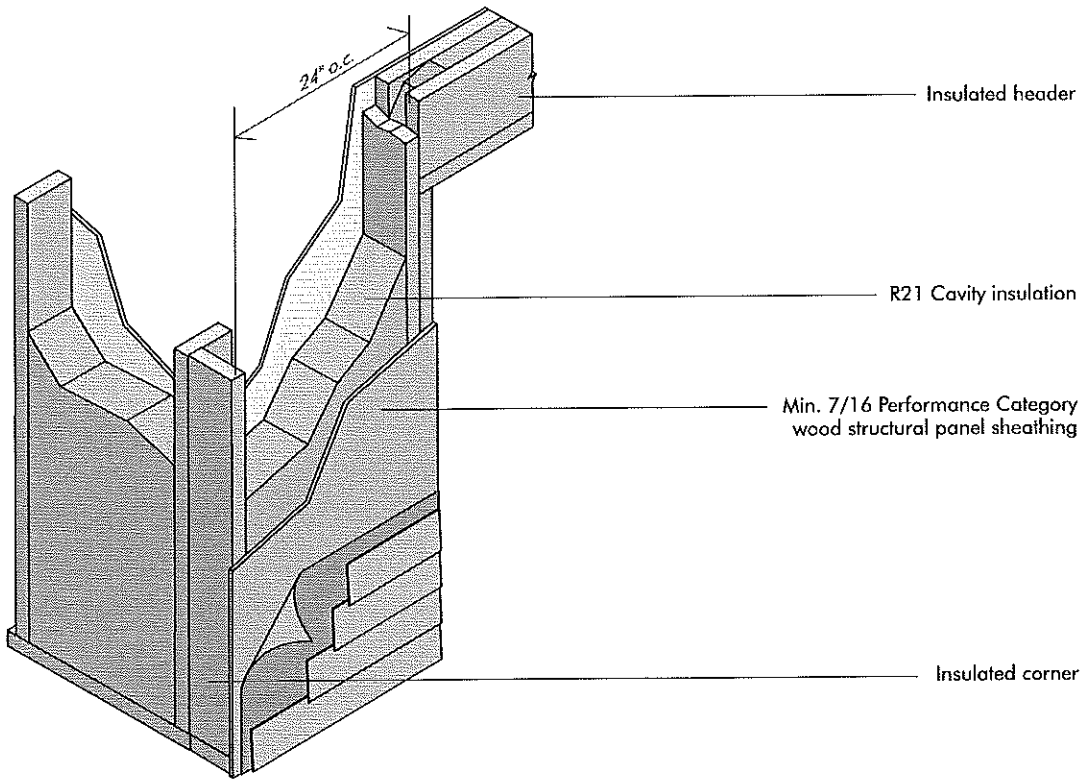

Form No. P320A ■ © 2017 International Code Council Inc. and APA – The Engineered Wood Association

R20 WALL ASSEMBLY E

2x4 WALL

This assembly combines 2x4 framing with some advanced framing techniques. It includes insulated siding, insulated headers, R15 cavity insulation and double top plates. The framing factor is assumed to be no greater than 22 percent.[a]

2x4 with R15 Batt Insulation, Insulated Headers, Insulated Siding, Advanced Framing

COMPONENTS		R-VALUES
Insulated Siding		3.0
Min. 7/16 Performance Category Wood Structural Panels		0.62
Cavity Insulation (R15 high density fiberglass batts, or equivalent)		15
3-1/2" Framing	18% framing + 4% headers = 22% framing factor	4.38
3-1/2" Insulated Headers		13.9[b]
Air films and 1/2" Drywall		1.38
Net Effective R-Value of the Total Solid Wall		16.59
Total Wall U-Factor		0.060

a. 22% framing factor is calculated using studs at 16" o.c. (framing factor = 25%) with a combination of insulated corners, insulated interior-exterior wall intersections and limited cripple supports at door and window openings (4% maximum reduction in framing percentage, 3% assumed). See page 7 for additional information. This assembly is subject to verification and approval by the local authority having jurisdiction.

b. R13.9 represents a single-ply wood header consisting of 1.5" of wood and 2" of minimum R6/inch insulation.

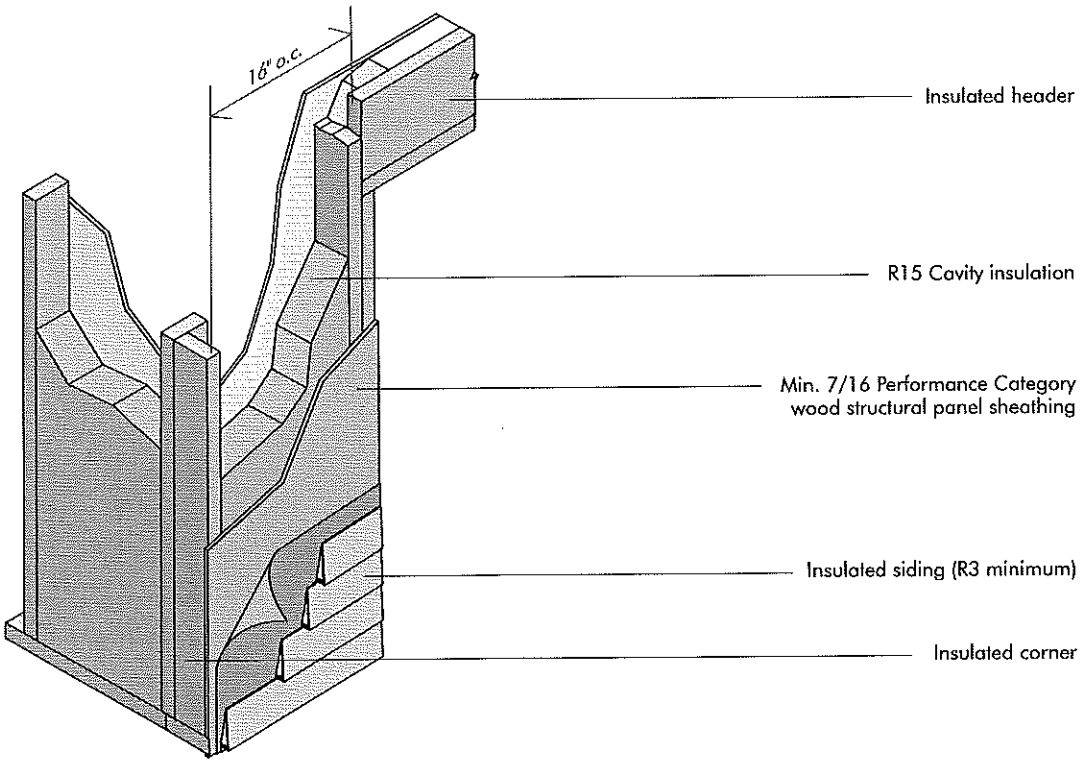

Form No. P320A ■ © 2017 International Code Council Inc. and APA – The Engineered Wood Association

ADDITIONAL RESOURCES

RESOURCES FROM APA

APA – The Engineered Wood Association offers a comprehensive set of services and tools for builders, designers, energy raters, building officials, and other industry professionals. If you're looking for detailed product information, training materials or technical assistance, APA can help. Resources available from APA include:

APA Website—www.apawood.org is your link to in-depth design and building support, including a library of more than 500 publications available for free instant PDF download.

CAD Details—www.apacad.org features more than 250 free CAD details for wood-frame construction, including advanced framing details.

Walls—www.apawood.org/walls provides resources that support the design and construction of safe, durable walls that are code-compliant and energy efficient. Featured topics include wall bracing and advanced framing. Related APA publications available for free download from this website include:

- *Advanced Framing Construction Guide*, Form M400
- *Performance Walls: Simplified Bracing Method Streamlines Design*, Form P310
- *APA System Report: APA Simplified Wall Bracing Method*, Form SR-102

The IRC Wall Bracing Calculator is also featured at www.apawood.org/calculator. This online tool provides assistance with the design of residential wall bracing for compliance with the 2009, 2012, and 2015 International Residential Code.

To learn more about the International Residential Code prescriptive bracing provisions, refer to *A Guide to the 2015 IRC® Wood Wall Bracing Provisions*, co-authored by APA and the International Code Council. The book, along with information about related residential wall bracing seminars, is available at www.iccsafe.org.

Build a Better Home—www.buildabetterhome.org features construction details, tips, videos and other resources that support the protection of homes against damaging moisture infiltration. Related APA publications available for free download from this website include:

- *Build A Better Home: Walls*, Form A530
- *Build A Better Home: Roofs*, Form A535
- *Build A Better Home: Foundations*, Form A520
- *Build A Better Home: Mold and Mildew*, Form A525

APA Product Support Help Desk—Staffed by engineered wood product specialists, the APA Help Desk answers your questions about the specification and application of APA products. Contact (253) 620-7400 or help@apawood.org.

BUILDING CODES REFERENCED IN THIS GUIDE

Published by the International Code Council. For more information, visit www.iccsafe.org.

- 2009, 2012 and 2015 International Building Code
- 2009, 2012 and 2015 International Energy Conservation Code
- 2009, 2012 and 2015 International Residential Code

ADDITIONAL REFERENCES

- ASHRAE: www.ashrae.org
- Building Energy Codes Program REScheck:™ www.energycodes.gov/rescheck
- Building Science Corporation: www.buildingscience.com
- Coalition for Advanced Wood Structures: www.fpl.fs.fed.us/partners/caws/index.shtml
- ENERGY STAR:® www.energystar.gov
- ENERGY STAR® in Canada: www.nrcan.gc.ca/energy/products/energystar/12519
- National Association of Home Builders, ICC 700 National Green Building Standard: www.nahbgreen.org
- ICC Evaluation Service, ICC-ES Environmental Criteria: www.icc-es.org/ep/er-ec.shtml
- National Research Council Canada, National Model Construction Codes and Guides: www.nrc-cnrc.gc.ca/eng/publications/codes_centre/codes_guides.html
- National Institute of Building Sciences: www.nibs.org
- Residential Energy Services Network (RESNET): www.resnet.us
- U.S. Department of Energy, Building Energy Codes Program: www.energycodes.gov
- U.S. Department of Energy, Building Technologies Office: www.eere.energy.gov/buildings/building-technologies-office

ABOUT THE INTERNATIONAL CODE COUNCIL

The International Code Council is a member-focused association. It is dedicated to developing model codes and standards used in the design, build and compliance process to construct safe, sustainable, affordable and resilient structures. Most U.S. communities and many global markets choose the International Codes. ICC Evaluation Service (ICC-ES) is the industry leader in performing technical evaluations for code compliance fostering safe and sustainable design and construction.

Headquarters: 500 New Jersey Avenue, NW, 6th Floor, Washington, DC 20001-2070
District Offices: Birmingham, AL; Chicago, IL; Los Angeles, CA | 1-888-422-7233 | www.iccsafe.org

ABOUT APA

APA – The Engineered Wood Association is a nonprofit trade association of and for structural wood panel, glulam timber, wood I-joist, structural composite lumber, and other engineered wood product manufacturers. Based in Tacoma, Washington, APA represents approximately 160 mills throughout North America, ranging from small, independently owned and operated companies to large integrated corporations.

APA is a leader in wood-design testing and research. APA's 42,000-square-foot Research Center is staffed with an experienced corps of engineers, wood scientists, and wood-product technicians. Their expertise plays an important role in producing panel and engineered wood systems that meet the industry's highest performance standards and braced-wall designs that promote the structural safety of building construction.

7011 So. 19th St., Tacoma, Washington 98466 | Headquarters: 253-565-6600
Product Support Help Desk: 253-620-7400 / help@apawood.org | www.apawood.org

Form No. P320A ■ © 2017 International Code Council Inc. and APA – The Engineered Wood Association