Fire protection for townhouses that share a common wall

CGC A USG COMPANY

Gypsum Fire Wall Systems

SA-925

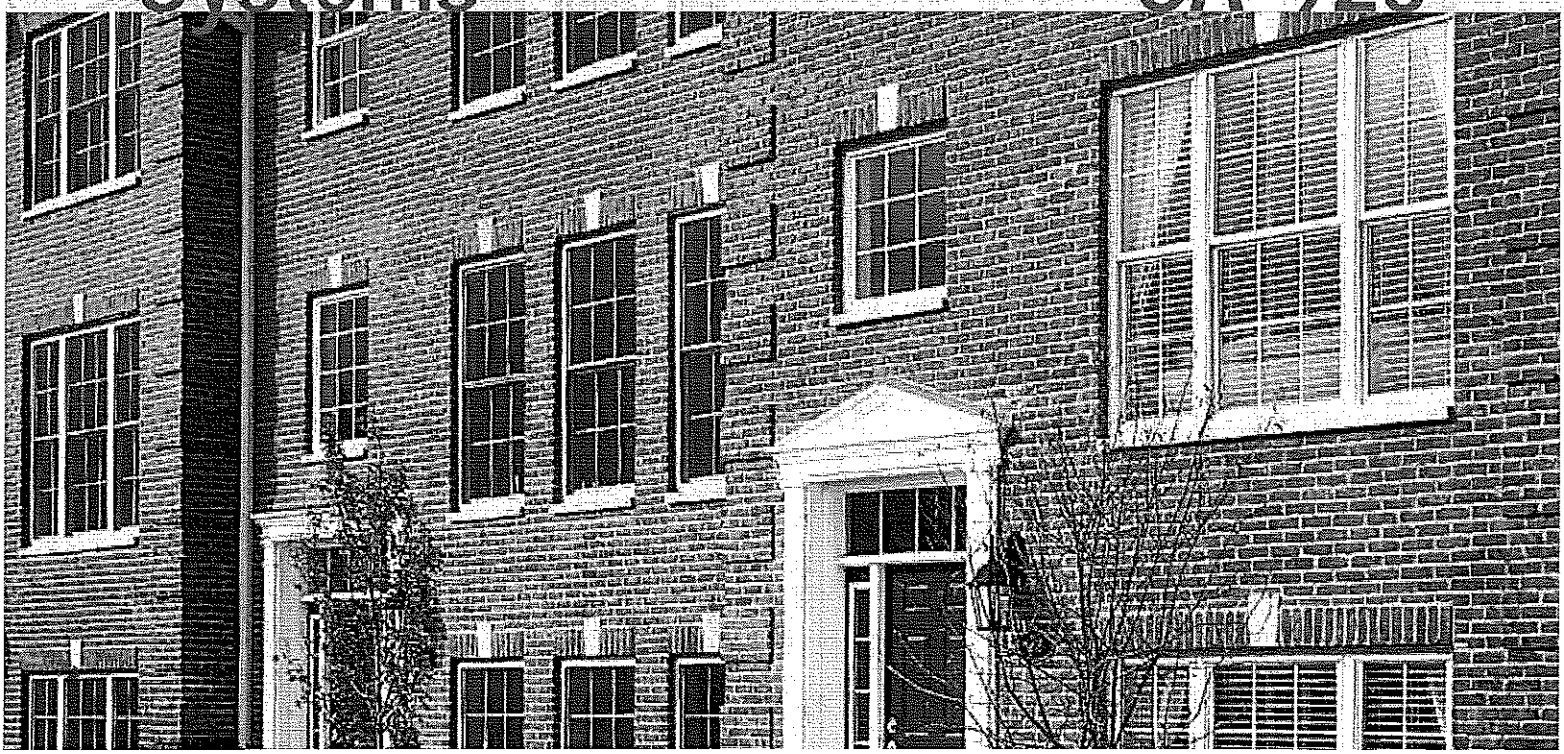

Fire walls between adjoining townhouses must provide fire-resistive ratings to ensure the safety of occupants in adjacent dwellings. Noise attenuation is also important, to ensure that townhouse dwellers are not disturbed by sound from their neighbors.

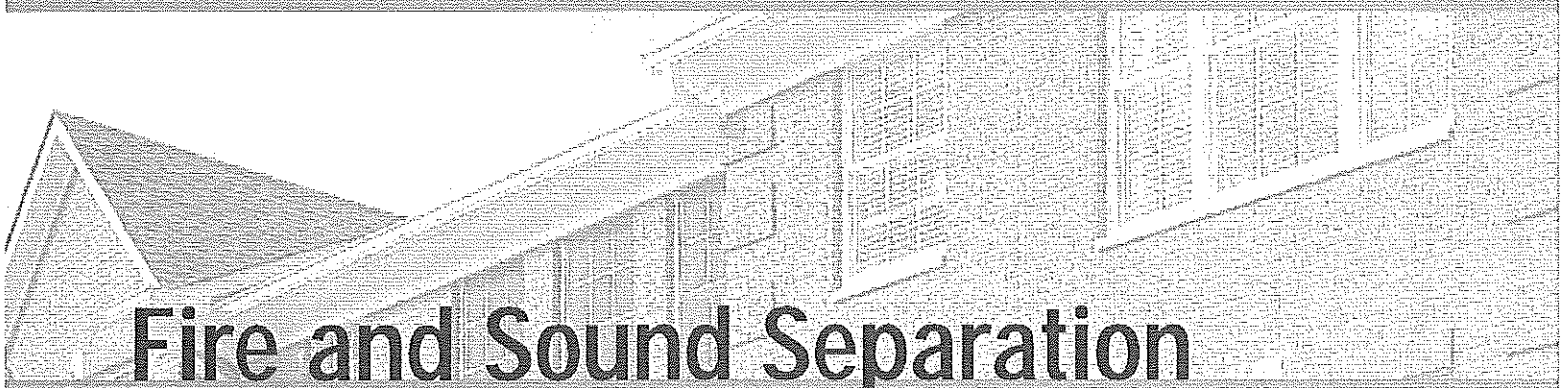

Fire and Sound Separation

User's Guide

This brochure explains:

- Where fire walls are used
- The components of fire wall systems
- How to select and specify the appropriate components of a fire wall system

	Pages	
Understand Your System	4	Overview Applications Components Performance Testing
Select Your System	9	Performance Selector Design Details
Design Your System	12	Good Design Practices
Specify Your System	13	Application Guide Specifications
For More Information		Customer Service 800 387.2690 Web Site www.cgcinc.com

Overview

Effective fire resistance and sound attenuation are important considerations in townhouse design.

A fire wall can be used in townhouses up to four stories (13.4 m (44')) tall and with all common floor-ceiling heights. It must either be continuous from the foundation to the underside of the protected roof sheathing, or continue through the roof to form a parapet.

The fire wall is designed to allow for collapse of the construction on the fire-exposed side without collapse of the entire wall. To do this, aluminum breakaway clips attach the separation wall to the adjacent framing. When one side is exposed to fire, the clips are designed to soften and break away, allowing the structure on the fire side to collapse, while the clips on the exposed fire side of the separation wall continue to support the wall. This allows the fire wall to remain intact, protecting the adjacent townhouse.

Typical Fire Wall Assembly

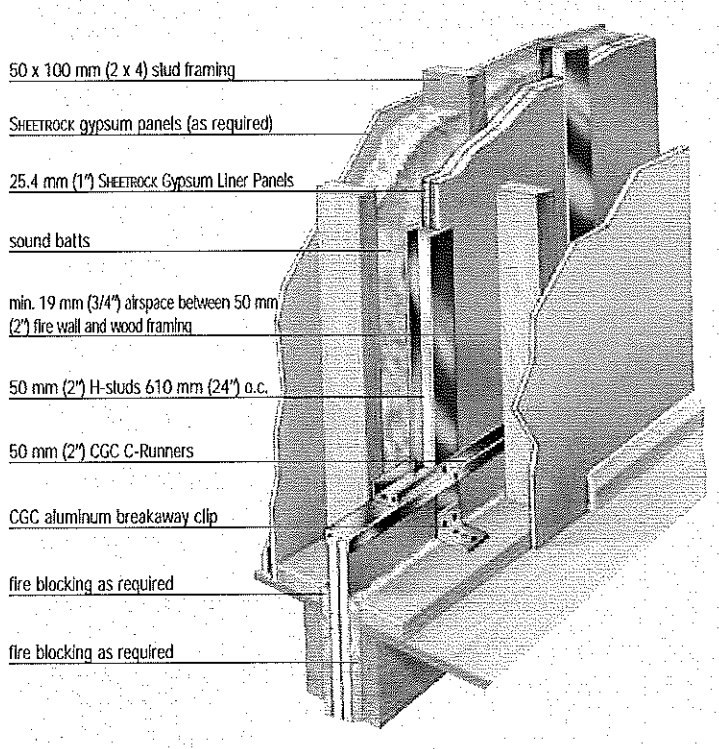

Applications

CGC® Fire Wall Systems are lightweight, non-loadbearing gypsum panel partition assemblies used to provide fire-resistive protection for common walls in townhouse construction.

These systems install quickly and easily. Because they weigh at least 50% less than masonry walls, installation proceeds rapidly. In addition, use of these assemblies gains valuable floor space for the building interior, since thickness is 89 mm (3-1/2″) compared to 200 to 300 mm (8″ to 12″) for a masonry wall without interior finish.

Components

CGC Fire Wall Systems have been comprehensively tested for fire resistance ratings only when all of the system components are used together. Substitutions of any of the components are not recommended and are not supported by CGC. Refer to the appropriate product material safety data sheet for complete health and safety information.

Gypsum Liner Panels

SHEETROCK® Gypsum Liner Panels

- Noncombustible core encased in water-resistant 100% recycled green face and back paper
- ULC/UL classified for fire resistance (type SLX)
- Panels are 25.4 mm (1") thick and 610 mm (24") wide with beveled edges and are available in 2400 - 4267 mm (8'-14') lengths
- Refer to product submittal sheet WB2278 for complete information

SHEETROCK HUMITEK Gypsum Liner Panels

- Noncombustible core encased in a water- and mold-resistant, 100%-recycled blue face and back paper
- ULC/UL classified for fire resistance (type SLX)
- Panels are 25.4 mm (1") thick and 610 mm (24") wide with beveled edges and are available in 2400 - 4267 mm (8'-14') lengths
- Refer to product submittal sheet WB2313 for complete information

Metal Framing Components

CGC® Steel C-Runner, CGC Steel H-Stud

- Galvanized steel

CGC Aluminum Breakaway Clip

- Performs as a break-away fuse by melting or yielding from the rise in temperature on the fire side of the wall
- Allows the fire-engulfed structure to collapse independent of the fire wall

Related Products

Acoustical sealant

- Highly elastic, water-based sealant

CGC All Purpose Joint Compound

- Versatile performer: tape, finish, texture, laminate, or skim coat
- Combines single-package, ready-mixed convenience with good taping and topping performance
- Refer to product submittal sheet J60A for complete information

Performance Testing

CGC Fire Wall Systems have been independently tested to meet performance requirements for fire resistance, structural performance and sound control.

Performance Tests

Extensive testing and continuous improvements ensure that CGC Fire Wall Systems will provide the vertical fire resistance and sound performance that projects demand.

Testing Methods

CGC Fire Wall Systems have been tested to ensure long-term performance.

All CGC products and systems undergo exhaustive testing to ensure that they meet exacting standards. CGC's products are Classified as to fire resistance and fire-hazard properties. As part of this protocol, Underwriters Laboratories of Canada, (ULC) and Underwriters Laboratories Inc. (UL) periodically audit production of these materials to ensure compliance with necessary properties. ULC and UL are independent, not-for-profit product safety testing and certification organizations that have tested products for public safety for over a century.

Products and systems are tested in accordance with ASTM standards. ASTM International is one of the largest voluntary standards development organizations in the world, and is a trusted source for technical standards for materials, products, systems, and services.

Sound Transmission Class (STC) rates the effectiveness of walls and other components at blocking airborne sound.

Testing Results

Fire Protection

Fire walls must ensure that fire does not spread from one townhouse to the next. Building codes mandate that fire walls are tested according to specific test standards, such as CAN/ULC S101, or ASTM E119, "Standard Test Method for Fire Tests of Building Construction and Materials," or its equivalent.

Fire resistance testing ensures that this critical performance component will not be compromised when the system is properly installed. Fire testing results in the following:

- ULC/UL Classification of all gypsum panel components for fire resistance
- ULC/UL listing of system fire resistance

Sound Control

Sound control test data demonstrate the effectiveness of CGC Fire Wall Systems in attenuating sound. This means that occupants of adjacent buildings will have more privacy. STC ratings up to 60 are available.

Moisture/Mold

The best way to minimize damage from moisture and mold is to minimize or eliminate exposure to water before, during and after construction. In all cases where moisture intrusion occurs, eliminate all sources of moisture immediately.

SHEETROCK HUMITEK Gypsum Liner Panels have a noncombustible, moisture-resistant core encased in a water- and mold-resistant, 100% recycled blue face and black paper. When used in conjunction with good construction practices, this product will minimize, but not eliminate, the risk of moisture damage.

Performance Testing

Sustainability

The LEED® (Leadership in Energy and Environmental Design) program is a guideline for building solutions established by the U.S. Green Building Council (USGBC).

LEED's mission is to transform the building industry by establishing a common standard of measurement to define what constitutes a "green building." To this end, LEED provides a framework for assessing building performance and meeting sustainability goals. This framework assigns points for certain sustainability criteria, such as sustainable site development, water savings, energy efficiency, materials selection and indoor environmental quality.

Specific products cannot be LEED-certified, because there are many contingent factors in each project that must be considered. However, certain products may assist you in obtaining LEED points for your design solution. For example:

CaGBC LEED Credits	MR 2	
Construction Waste Management	2.1	Divert 50% of project waste (by weight or volume) from landfill (1 point)
	2.2	Divert another 25% of project waste (by weight or volume) from landfill (1 point)
Recycled Content	MR 4	
	4.1	If sum of project materials by value have 7.5% post-consumer or 15% post-industrial (1 point)
	4.2	If sum of project materials by value have 15% post-consumer or 30% post-industrial (1 point)
Local/Regional Materials	MR 5	
	5.1	If 10% of project materials are shipped less than 800 km (500 miles) by truck, or less than 2400 km (1500 miles) by rail (1 point)
	5.2	If 20% of project materials are shipped less than 800 km (500 miles) by truck, or less than 2400 km (1500 miles) by rail (1 point)
Low-Emitting Materials	EQ .4	
	4.2	Drywall Installation (less than 50g/L per CSCAQM, Table 1) (1 point)

The following chart lists CGC Fire Wall System products that may be eligible for LEED points. Using products with a high recycled content is only one part of the equation. Another key measure of sustainability is embodied energy, which assesses the total energy required to produce a particular material or building component and get it to a building site. For example, if you use a product with a high recycled content but need to ship it across the country, the embodied energy costs of transportation may outweigh any environmental advantages of using a recycled product. It may be more environmentally sound to ship products made of virgin material from a plant close to a job site.

CaGBC LEED Credits	MR 4.1 and 4.2				EQ 4		MR 5.2
Product Family	Post-Consumer	Post-Industrial	Embodied Energy[a,b]	Density lbs./cu.ft.	VOC[c]	Mfg. Efficiency	Raw Materials (% by weight)
SHEETROCK Panels—percent varies across 23 plants nationwide[d]	~5%	0%-95% 95% 36.5%	3.6MJ/kg	43-50	none	95+%	95% gypsum, 5% paper, 1% starch; special panel with wax and glass fibre
Joint Compound—Drying Type	0	0	3 MJ/kg	100	<2 g/L	98%	Limestone and latex
Joint Compound—Setting Type	0	0	3 MJ/kg	100	none	98%	Plaster of paris, limestone & mica
SHEETROCK Acoustical Sealant	0	0			<65 g/L		Limestone, water, acrylic polymer

For more information on LEED, visit the following web sites:

U.S. Green Building Council
www.usgbc.org

Leadership in Energy & Environmental Design
www.usgbc.org/leed/leed_main.asp

Canada Green Building Council
www.cagbc.org

Notes

(a) Megajoules per kilogram. (b) Transportation of gypsum board accounts for over 10% of the board's embodied energy, while mining accounts for less than 1%.
(c) Section 01350 of the Material Specifications adopted by the Collaborative for High Performance Schools (CHPS) for VOC emissions. All FIBEROCK panels use FGD gypsum, but the FGD gypsum content of SHEETROCK panels changes from plant to plant and even day to day at any one plant, due to availability. The recycled contents above are approximate. While FGD gypsum is not available everywhere in Canada, CGC does have plants strategically located to meet your needs. Evaluation should be made for each job on the benefits of using FGD instead of natural gypsum.

Performance Selector

2 Hour Fire-rated Construction	Non-loadbearing		Acoustical Performance		Reference	
Construction Detail	**Description**	**Test Number**	**STC**		**ARL**	**Index**
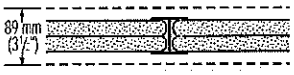	• 25.4 mm (1") SHEETROCK Gypsum Liner Panels • 50 mm (2") CGC H-Studs 610 mm (24") o.c. – minimum 19 mm (3/4") air space both sides separating liner panels from *adjacent construction*	**ULC Des W314** or **UL Des U336**			SA925	**1**
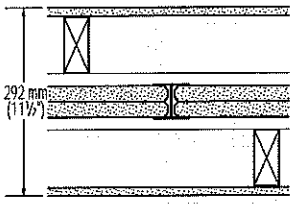	Fire wall (non-loadbearing) • 25.4 mm (1") SHEETROCK Gypsum Liner Panels • 50 mm (2") CGC H-Studs 610 mm (24") o.c. Protected wall (bearing or non-loadbearing) of wood or steel studs each side min 19 mm (3/4") from liner panels • 12.7 mm (1/2") SHEETROCK Gypsum Panels	**ULC Des W314** or **UL Des U336**	46	**RAL-TL-88-353**	SA925	**2**
			54	**RAL-TL-88-348** Based on 50 mm (2") mineral wool batt on one side		
			57	**RAL-TL-88-351** Based on 2x4s and 75 mm (3") mineral wool batt one side		
			58	**RAL-TL-88-347** Based on 2x4s and 50 mm (2") mineral wool batt on both sides		
			60	**RAL-TL-88-350** Based on 2x4s and 75 mm (3") mineral wool batt on both sides		
	Note These systems do not provide a fire rating for adjacent wood- or steel-framed walls.					

Design Details

Basic Interfaces

Intersection at Roof

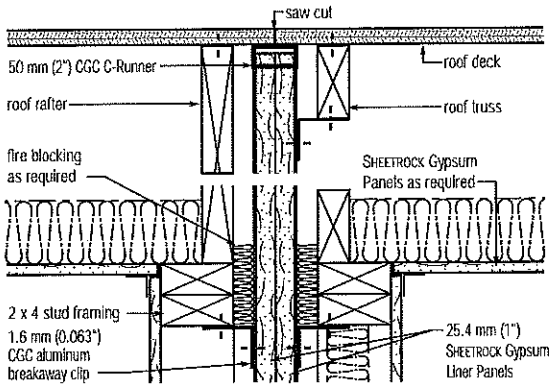

Exterior Wall Intersection (as required)

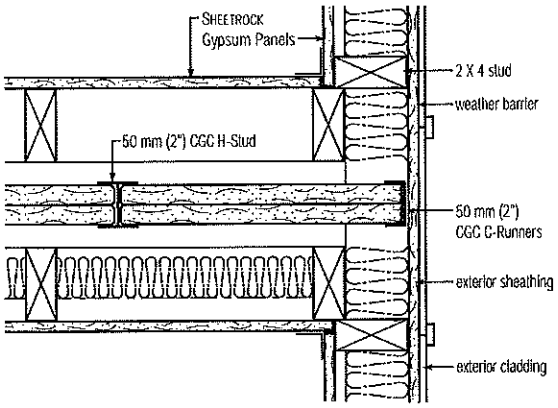

Intermediate Floor

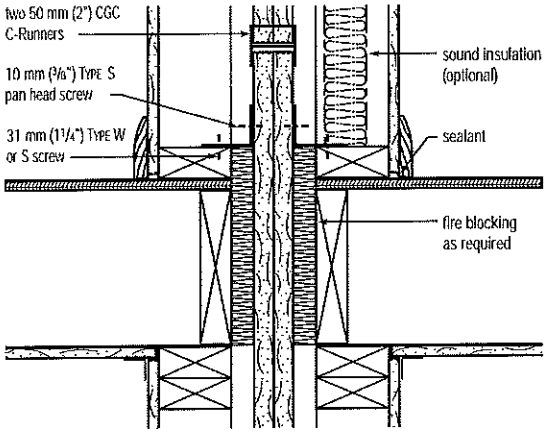

Foundation

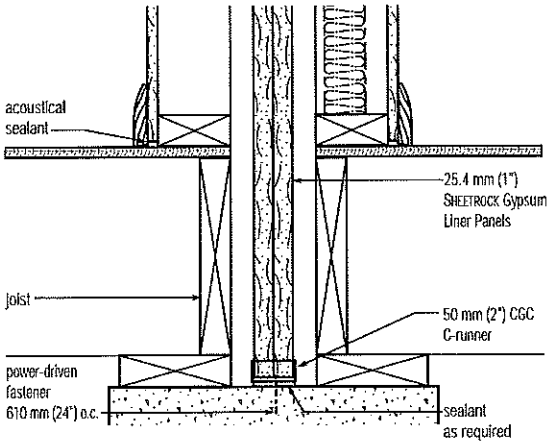

Runner Installation

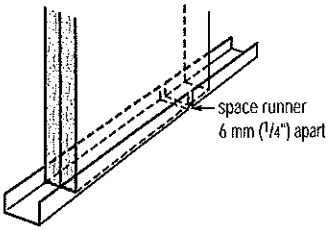

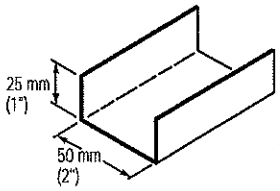

CGC C-Runner

Components

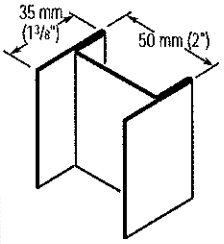

CGC H-Stud

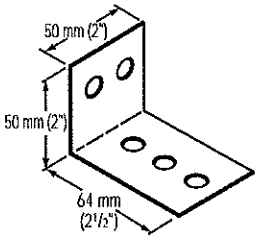

1.6 mm (.063") CGC Aluminum
Breakaway Clip

Clip Spacing Requirements

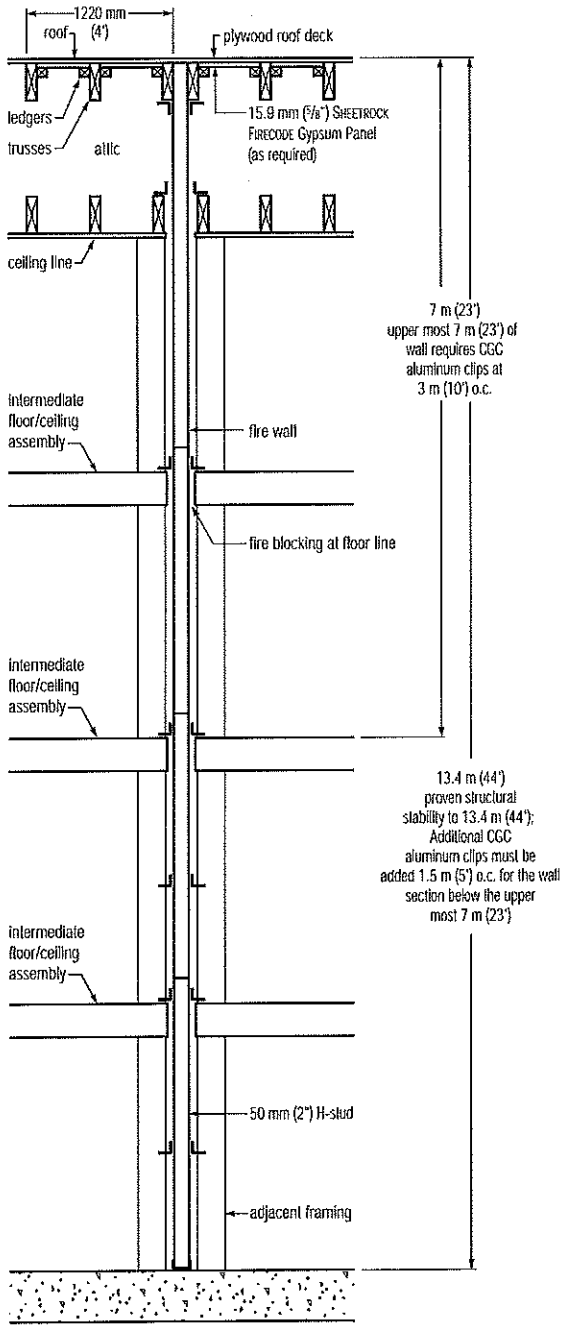

Typical firewall roof parapets (height as required by code)

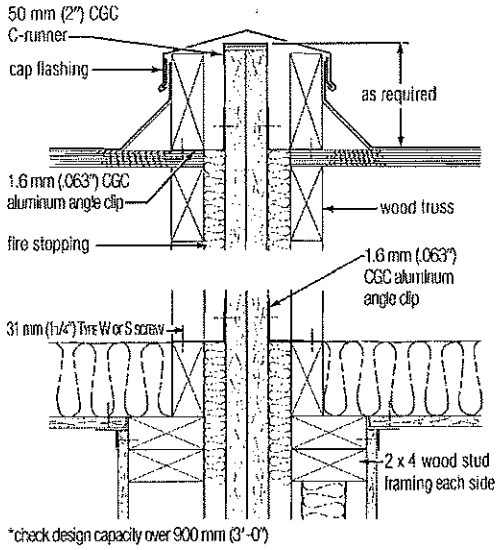

Note

As allowed by code, 16 mm (5/8") SHEETROCK FIRECODE Core Gypsum Panels may be used as underlayment to roof sheathing with panels extending 1220 mm (4') on both sides of fire wall and possibly roof side at rake end. Clip placement on page 10 is for typical construction.

Good Design Practices

Use this section as a reference if questions arise during the design or application of CGC Fire Wall Systems.

This section is an overview of good design, application, installation and safety considerations that should be addressed when CGC's products and systems are used. This section outlines some major issues, but is not intended to be a comprehensive review.

We recommend that architects and contractors seek the assistance of safety professionals, especially at the professional construction site, because there are many factors to consider that are not included here. For safety and material handling information, please refer to Chapter 13 of *The Gypsum Construction Handbook, Centennial Edition.*

1	System Performance	CGC Inc. conducts tests on products and systems to meet performance requirements of established test procedures specified by various agencies. Upon written request we will provide test certification for published fire, sound, structural and other pertinent data covering systems designed and constructed according to our published specifications. Substitutions of any of the components are not recommended and are not supported by CGC Inc.
2	Clip Attachment	Fire wall systems require attachment of aluminum breakaway clips to adjacent framing on both sides of the H-Studs. Clips are attached to each stud and vertical C-Runners with one 10 mm (3/8") Type S screw, and to adjacent framing with one 31 mm (1-1/4") Type W or Type S Screw. The system may be stacked to a maximum height of 13.4 m (44'), and normally require a vertical clip spacing of 3 m (10') o.c. max. However, when the wall has a stacked height exceeding 7 m (23'), clip spacing along each stud below the 7 m (23') stacked height must be reduced to 1.5 m (5') o.c. max. (see illustration on page 11). When the fire wall system is used as an exterior wall, with adjacent framing on only one side, clips must be spaced as noted in Section 3.2 of the Application Guide Specifications. Note, for this case, that two 10 mm (3/8") Type S screws are required for clip attachment to the vertical H-Studs.
3	Sound Control Construction	For maximum sound control with wall systems, seal the entire perimeter and between the horizontal, back-to-back C-Runners at the intermediate levels with a minimum 6 mm (1/4") bead of Acoustical Sealant.
4	Limitations	For use as a common 2-hr. fire resistance rated wall separating townhouses. Not to be used for shear walls.
5	Additional Information	See SA100, *Fire-Resistant Assemblies,* for fire- and sound-rated systems; SA200, *Acoustical Assemblies,* for sound-rated systems; and SA934, *Moisture-Resistant Assemblies,* for information on moisture resistance.

Application Guide Specifications

This guide specification is provided to assist you in specification of CGC Fire Wall Systems. If you have additional questions or would like more information regarding this or other CGC products and systems, please contact CGC at 800 387.2690.

Part 1: General

1.1 Scope

Specify to meet project requirements.

1.2 Qualifications

A. All materials, unless otherwise indicated, shall be manufactured by CGC Inc., and shall be installed in accordance with its current printed directions.

B. System must be built in accordance with applicable model code research reports.

1.3 Delivery and Storage of Materials

All materials shall be delivered in their original unopened packages and stored in an enclosed shelter providing protection from damage and exposure to the elements. Damaged or deteriorated materials shall be removed from the premises. Installed panels should be protected from the environment and dry before enclosing the wall.

Warning: Store all SHEETROCK Gypsum Panels flat. Panels are heavy and can fall over, causing serious injury or death. Do not move unless authorized. Use caution not to exceed floor limits or cause tripping hazards.

1.4 Environmental Conditions

In cold weather during gypsum panel joint finishing, temperature within the building shall be maintained within the range of 13 to 21° C (55 to 70° F). Adequate ventilation shall be provided to carry off excess moisture. Storage and installation of products must be protected at all times from adverse environmental conditions and elements.

Part 2: Products

2.1 Materials

A. 25 mm (1") SHEETROCK Gypsum Liner Panels (HUMITEK), 610 mm (24") wide, beveled edge, lengths as required.

B. CGC Steel H-Studs (200HS25), galvanized, lengths as required.

C. CGC Steel C-Runners (200CR25) galvanized, x 3 m (10') length.

D. CGC Aluminum Angle Clip—50 x 64 x 1.6 mm (2" x 2-1/2" x 0.063") Aluminum Breakaway Clips.

E. Joint Treatment—Select a CGC Joint System.

F. Fasteners—Screws (31 mm (1-1/4") Type W) (31 mm (1-1/4") TYPE S) (10 mm (3/8") TYPE S, pan head).

G. Sound batts 25 mm (1"), 38 mm (1-1/2"), 50 or 75 x 400 mm (2" or 3" x 16") or 610 x 1220 mm (24" x 48").

H. Acoustical sealant.

Part 3: Execution

3.1 Solid Wall

A. Foundation

Position 50 mm (2") C-Runner and securely attach to foundation with power-driven fasteners at both ends and spaced 610 mm (24") o.c.

Space adjacent runner sections 6 mm (1/4") apart. Caulk under runner at foundation with min. 6 mm (1/4") bead of acoustical sealant.

B. First Floor

Install H-studs and liner panels to a convenient height (max. 610 mm (2')) above the floor line. Install two thicknesses of 25 mm (1") liner panels vertically in C-Runner with long edges in H-Stud. Install H-Studs and liner panels alternately until wall is completed. Cap top of panels with horizontal C-Runner. Fasten C-Runner flanges at all corners both sides with 10 mm (3/8") Type S screws.

C. Intermediate Floors and Bottom of Trusses

Cap top of liner panels and H-Studs with C-Runner. Attach C-Runner for next row of panels to the C-Runner below with end joints staggered at least 300 mm (12"). Fasten the C-Runners together with double 10 mm (3/8") screws at ends and 610 mm (24") o.c. Attach all H-Studs and vertical C-Runners to adjacent framing with Aluminum Breakaway Clips. Clips attaching H-Studs and vertical C-Runners to adjacent framing on both sides require attachment to the H-Stud and C-Runner with one 10 mm (3/8") Type S screw. Clips attaching H-Studs and vertical C-Runners to adjacent framing on only one side and with exterior exposure on the other side require attachment to the H-Stud and C-Runner with two 10 mm (3/8") Type S screws. Attachment to the adjacent framing is with one 31 mm (1-1/4") Type W or Type S screw. Locate horizontal C-Runner joint within 610 mm (2') of the intermediate floor. Install fire blocking between the solid wall system and adjacent framing at floor lines, bottom of truss line, and any other locations required by the applicable code.

D. Roof

Continue installing H-Studs and liner panels for succeeding stories as described. Cut the liner panels and H-Studs to roof pitch and length as necessary to follow the roof pitch. At roof, cap liner panels and H-Studs with C-Runner. Attach all H-Studs to adjacent framing with Aluminum Breakaway Clips. Clips attaching H-Studs and vertical C-Runners to adjacent framing on only one side and with exterior exposure on the other side require attachment to each vertical framing member with two 10 mm (3/8") Type S screws.

3.2 Exterior Wall

CGC Fire Wall Systems are suitable for exterior walls with an appropriate weather barrier installed over the system and under an exterior cladding. Exterior exposure is limited to 718 Pa (15 psf) wind load and requires vertical clip spacing of 1220 mm (4') o.c. maximum. Exterior exposure requires attachment of the aluminum breakaway clips to each vertical steel framing member with two 10 mm (3/8") Type S screws. Attachment of the clips to adjacent framing is with one 31 mm (1-1/4") Type W or Type S screw. Uppermost clips should be placed as close to the roof line as practical attachment allows.

About the cover:

Project:

Townhomes at Meridian Square

Indianapolis, IN

Design and Construction:

Ryland Homes

Photographer:

©Albert Vecerka/Esto

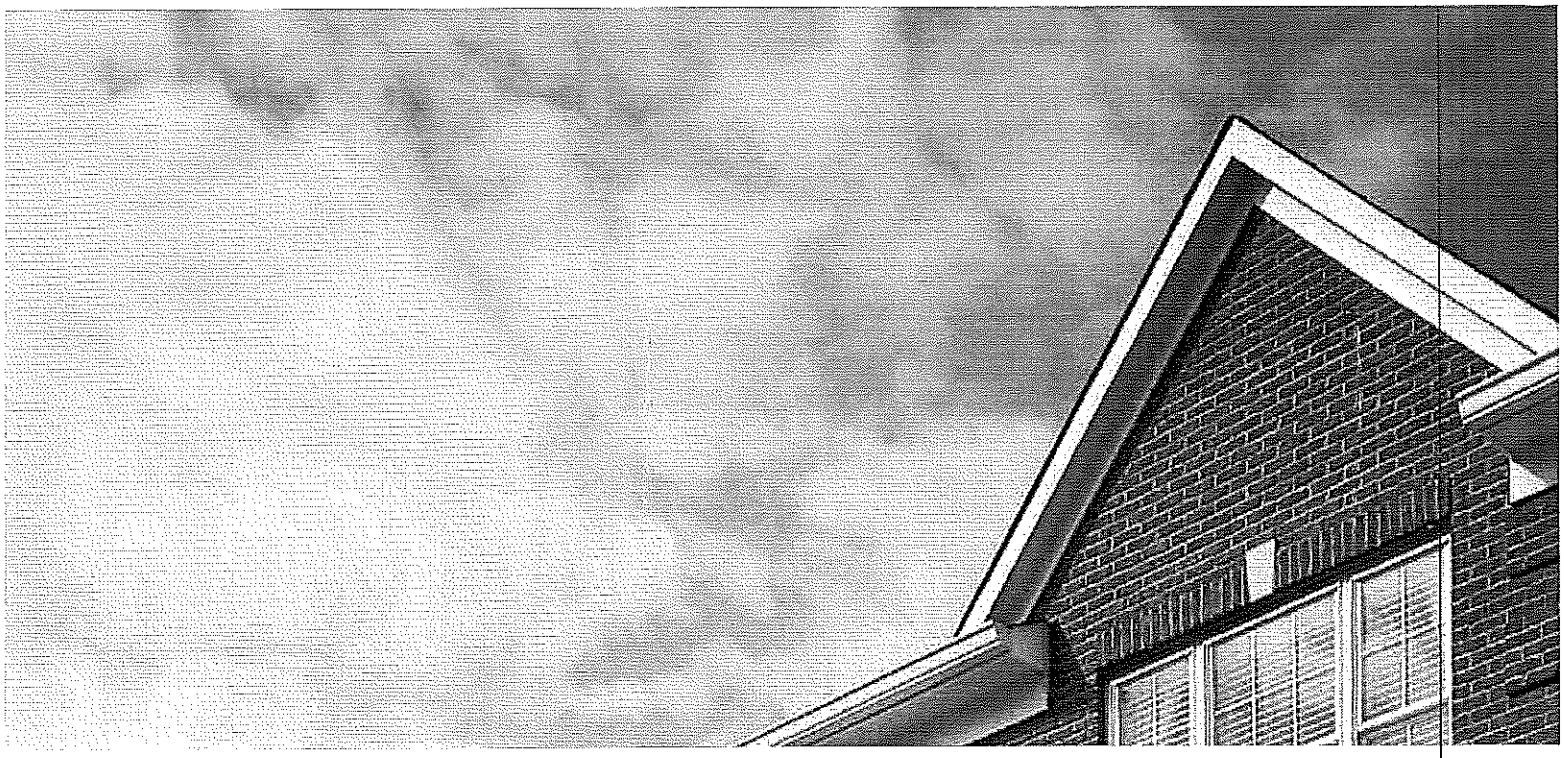

Customer Service
800 387.2690

Web Site
www.cgcinc.com

Metric Specifications
CGC Inc., will provide metric conversions on its products and systems to help specifiers match metric design sizes. In addition, some products are available in metric dimensions from selected manufacturing plants. Refer to SA100, *Fire-Resistant Assemblies*, for additional information and a table of Metric Equivalents.

Trademarks
The following trademarks used herein are owned by United States Gypsum or a related company: FIRECODE, SHEETROCK, USG. LEED is a registered trademark of the U.S. Green Guilding Council.

Notice
We shall not be liable for incidental and consequential damages, directly or indirectly sustained nor for any loss caused b application of these goods not in accordance with current printed instructions or for other than the intended use. Our liability is expressly limited to replacement of defective goods. Any claim shall be deemed waived unless made in writing to us within thirty (30) days from date it was or reasonably should have been discovered.

Note
All products described here may not be available in all geographic markets. Consult your local sales office or representative for information.

Safety First!
Follow good safety and industrial hygiene practices during handling and installation of all products and systems. Take necessary precautions and wear the appropriate personal protective equipment as needed. Read material safety data sheets and related literature on products before specification and/or installation.

CGC A USG COMPANY

CGC Inc.
350 Burnhamthorpe Rd. W., 5th Floor
Mississauga, ON L5B 3J1

EWB-W152/rev. 12-06
© 2004, CGC Inc., CP
Printed in Canada